12
600
A105
金属硬密封固定球阀
Metal to metal trunnion ball valve

6
300
A105
锻钢固定球阀
Forged Trunnion Ball Valve

16
300
A105
锻钢固定球阀
Forged Trunnion Ball Valve

16
300
LF2
全焊接球阀
Full Welded Ball Valve

16
600
A105
全焊接球阀
Full Welded Ball Valve

14
900
LCC
上装式球阀
Top Entry Ball Valve

18
600
WCB
铸钢固定气动球阀
Cast Trunnion Pneumatic Ball Valve

26
600
LF2
电动固定球阀
Electric Trunnion Ball Valve

Royale Valve
产品锦集
Products Collection

36
150
LCB
铸钢固定球阀
Cast Trunnion Ball Valve

8
150
WCB
铸钢固定球阀
Cast Trunnion Ball Valve

2
600
WCB
铸钢固定球阀
Cast Trunnion Ball Valve

4
600
LCC
铸钢浮动球阀
Cast Floating Ball Valve

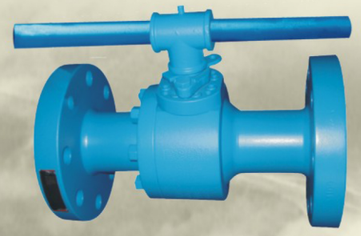

2
600
A105
铸钢浮动球阀
Cast Floating Ball Valve

10
300
A105
三通球阀
3 Way Ball Valve

6
900
WCB
轨道球阀
Orbit Ball Valve

1/2
600
F316
NPT内螺纹连接球阀
NPT ball valve

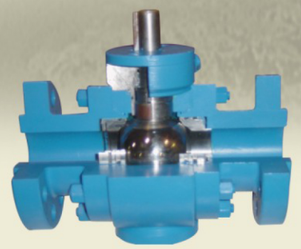

4
1500
A105
金属硬密封固定球阀
Metal to metal trunnion ball valve

1、防火设计
Fire Safe

固定球阀 Trunnion Ball Valve

正常使用中 Normally use　　火烧以后 After be burnt

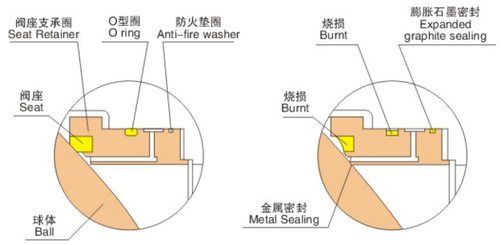

固定球阀在正常使用时，由阀座与球面密封，阀座支承圈靠O型圈与阀体密封。此时都为软密封，密封可靠。阀座与O型圈烧损以后， 阀座支承圈向前移动，与球体直接进行金属密封，阀座支承圈靠膨胀石墨与阀体密封，达到防火效果。

When the trunnion ball valve be used normally, it sealed by seat and ball surface, seat retainer sealed by O-ring and body, these are soft sealed, reliable sealing. When the seat and O-ring are burnt, the seat retainer and ball will be metal to metal sealed directly, Also the seat retainer and body will be sealed by expanded graphite, thus act the anti-fire purpose.

浮动球阀 Floting Ball Valve

正常使用中 Normally use　　火烧以后 After be burnt

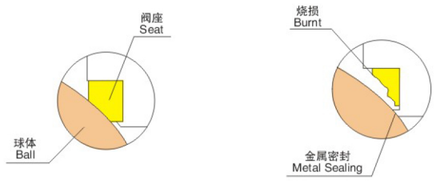

浮动球阀在正常使用时，由阀座与球面密封，密封可靠。阀座烧损以后，阀体移动，与球体直接进行金属密封，达到防火效果。

When the floating ball valve be used normally, it sealed by seat and ball reliably. When the seat is burnt, the body moved and metal to metal sealed with ball directly, thus act the anti-fire purpose.

另阀门为其余连接部位都装有防火密封圈，防止烧损。

In order to act anti-fire safe, the valve other connective position all have the anti-fire sealing ring.

2、防静电机能
Anti-static device

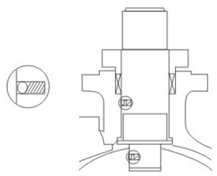

为防止球体及阀杆与PTFE摩擦而产生静电，容易静电打火点燃易燃易爆介质，而出现工况事故。在阀杆与球体，及阀杆与阀体之间设置了导静电装置，使静电通过管路导入地下，保证系统安全。

In order to prevent friction between ball and stem and PTFE that generates static electricity which may light the combustibles and explosives that cause an accident, in this ball valve, static-conduction spring is set between the stem and the ball, the stem and the body. Thus static electricity is conducted to ground and system safety is secured.

3、无外漏阀体密封结构
Sealed construction of valve body free of body leakage

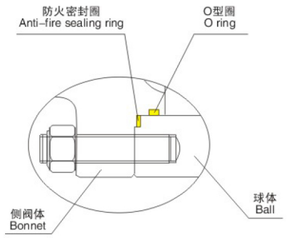

阀体与侧阀体的连接部位是靠垫片和O型圈双重密封，有双重保障后。火灾、高温、震动及开关钮矩的不均等因素均不会对该处造成泄露。

The connective position of valve body and bonnet is double sealed by gasket and O-ring, on this base, such factors as fire, high temperature, shock and uneven opening or closing of the torque all can't induce external leakage.

4、特殊阀座设计
Special seat structure

低压密封时
Low pressure sealing　　高压密封时
High pressure sealing

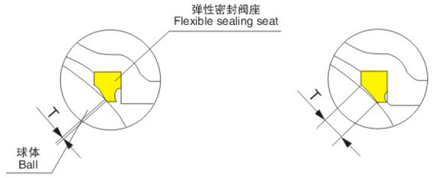

多年制造经验，设计出具有弹性力的双重密封阀座结构，当压力不断增高时，T值相应的不断增加，对于低压、高压及真空状态均具有良好的密封效果。

With years of manufacturing experience, double sealed structure of elastic seat was designed. When the pressure going up, the T value will be increased continuous, it will act good sealing performance under the codition of low pressure, high pressure and vacuum.

5、紧急密封(固定球阀采用)
Emergency sealing (For trunnion ball valve only)

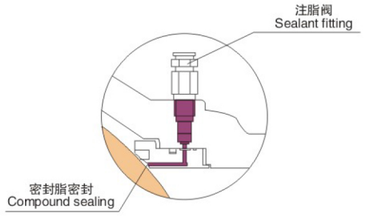

当出现紧急状况时，可向注脂阀加入密封脂，达到密封效果。

When the sealing of stem or seat is damaged to induce leakage, the compound can be used to do the secondary sealing.

6、阀座弹簧保护结构(固定球阀采用)
Seat spring protective structure (For trunnion ball valve only)

无弹簧保护 Non-spring protect　　有弹簧保护 Spring protect

有弹簧保护时介质内杂质不会进入弹簧孔，从而保护弹簧不受杂质影响。

With the spring protection, the impurity can't enter into spring hole, thus protect the spring from impurity.

7、双阻断(固定球阀采用)
Double block(For trunnion ball valve only)

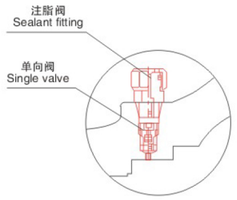

欧维克阀门在注脂阀前安装有单向阀，双重密封，保证阀体安全，注脂可靠。

The single valve is installed in front of sealant fitting, double sealing, reliable sealant, the body safety is secured.

8、双排放(固定球阀采用)
Double bleed (For trunnion ball valve only)

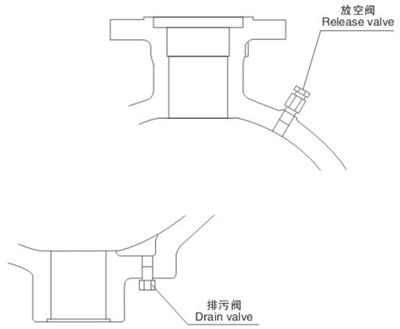

欧维克阀门都安装有NPT排污阀和放空阀，可在阀门运行中对阀门进行放空和清洗。

Oviko valve is installed NPT drain valve and release valve, it can be released pressure and cleaned during the operation of valve.

9、连接方式多样
Various end connections

凸面连接RF　　环连接RTJ　　对焊连接BW

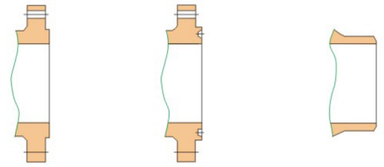

欧维克阀门为客户提供：法兰连接、环连接、对焊连接、螺纹连接、对夹连接等多种阀门连接方式。

Oviko valve can offer various connection: RF, RTJ, BW, NPT, Wafer, etc.

10、操作扭矩低
Low torque in operation

阀杆摩擦部位均安装有自润滑滑动轴承，因而耐磨损，并且操作灵活扭矩低。

The self-lubricated bearings are installed ot the friction of stem, resulting in wear resistance, flexiblility of operation and low torque.

11、各类驱动方式
Various driving methods

欧维克阀门上法兰符合ISO5211的规定，便于各类驱动器的连接，可配备手柄、蜗轮驱动器、气动执行器、电动执行器、液动执行器等各种操作系统。

The valve top work dimension is designed according to ISO 5211, which is convenient for connection and exchange of various drivers. The common driving types are manual, worm gear, pneumatic, electrical, hydraulic.

12、接长阀杆
Extension stem

对于直埋式安装球阀，可将阀杆接长，并将相应的注脂、排污、放空延伸到阀顶部，便于操作。

For the underground installed valve, the stem can be lengthened and for the convenience of operation, the corresponding compound injection nozzle, drainage valve and release valve can be extended to the top of the valve.

13、阀体自动泄压
Automatic cavity relief

固定球阀 Trunnion ball valve　　浮动球阀 Floating ball valve

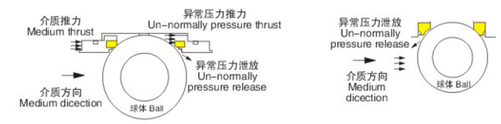

当阀门内部由于不稳定因素导致阀体压力异常增高时，固定球阀借由异常压力推开下游阀座，自动泄放异常压力，不影响上游阀座对介质的密封，浮动球阀阀体异常压力直接泄放到上游压力管道中，不影响下游阀座密封。

When the body pressure going up un-normally as the unstable factor, the trunnion ball valve downstream seat will be pushed by un-normally pressure, and release the un-normally pressure automatically, it doesn't damage to the sealing of upstream seat. The un-normally pressure which in the floating ball valve body will release the pressure into the upstream pipe directly, it doesn't damage to the sealing of the downstream seat.

流量系数及固定球阀全压差开启扭矩表
Cv Coefficient and Trunnion Ball Valve Torque Chart

NPS	150Lb		300Lb		600Lb		900Lb		1500Lb		2500Lb	
	扭矩 N-M	流量系数 Cv	扭矩 N-M	流量系数 Cv	扭矩 N-M	流量系数 Cv	扭矩 N-M	流量系数 Cv	扭矩 N-M	流量系数 Cv	扭矩 N-M	流量系数 Cv
1 1/2	30	308	60	308	75	308	95	165				
2×1 1/2	30	140	60	140	75	135	95	125				
2	42	500	80	420	115	350	150	320	468	320	589	285
3×2	42	220	80	210	115	190	150	185	468	180	589	170
3	140	1390	220	1050	334	1000	440	910	810	820	1580	825
4×3	140	630	220	600	334	560	440	505	810	500	1580	520
4	220	2550	360	2000	460	1850	830	1760	1500	1610	3964	1510
6×4	220	925	360	910	460	800	830	730	1500	730	3964	750
6	380	5249	680	5186	1000	4400	1880	4300	3750	4080	5500	3590
8×6	380	2500	680	2498	1000	2150	1880	2010	3750	2005	5500	2050
8	640	10750	1180	10262	2000	8450	3600	8400	5500	7980	11785	7160
10×8	640	5000	1180	4990	2000	4500	3600	4160	5500	4150	11785	3970
10	1200	17775	2120	17220	3580	14250	5280	14160	7560	13020	13200	11580
12×10	1200	8400	2120	8390	3580	8000	5280	7300	7560	7280	13200	6850
12	1655	26750	2490	25950	5890	22790	7380	21230	9800	19610	14692	17700
14×12	1655	14080	2490	14040	5890	13990	7380	13920				
14	2795	32600	4215	30900	6520	28600	8825	26600				
16×14	2795	14780	4215	14750	6520	14720	8825	14690				
16	3755	44700	5640	42600	8685	39250	11780	36600				
18×16	3755	20840	5640	20820	8685	20750	11780	20700				
18	5090	58500	8240	56450	13850	52000	18450	50540				
20×18	5090	28100	8240	28000	13850	27850	18450	27840				
20	6405	76000	11020	72700	18490	70500	25960	69700				
24×20	6405	29000	11020	28850	18490	28750	25960	26950				
24	12290	113500	19390	109450	30880	99000	42370	86750				
26	15100	128630	22770	123050	35180	114050	47590	102940				
28	17150	151750	25490	146050	38980	136500	52470	121200				
30	18580	179300	27460	171700	41830	158900	56200	140093				
36×30	18580	123000	27460	121550	41830	118300	56200	103080				
32	19880	199750	29550	187700	45190	175000	60840	159420				
36	22989	258300	34172	243050	52267	226300	70361	226033				

球阀配各种类型执行器
Kinds of Ball Valve Operation

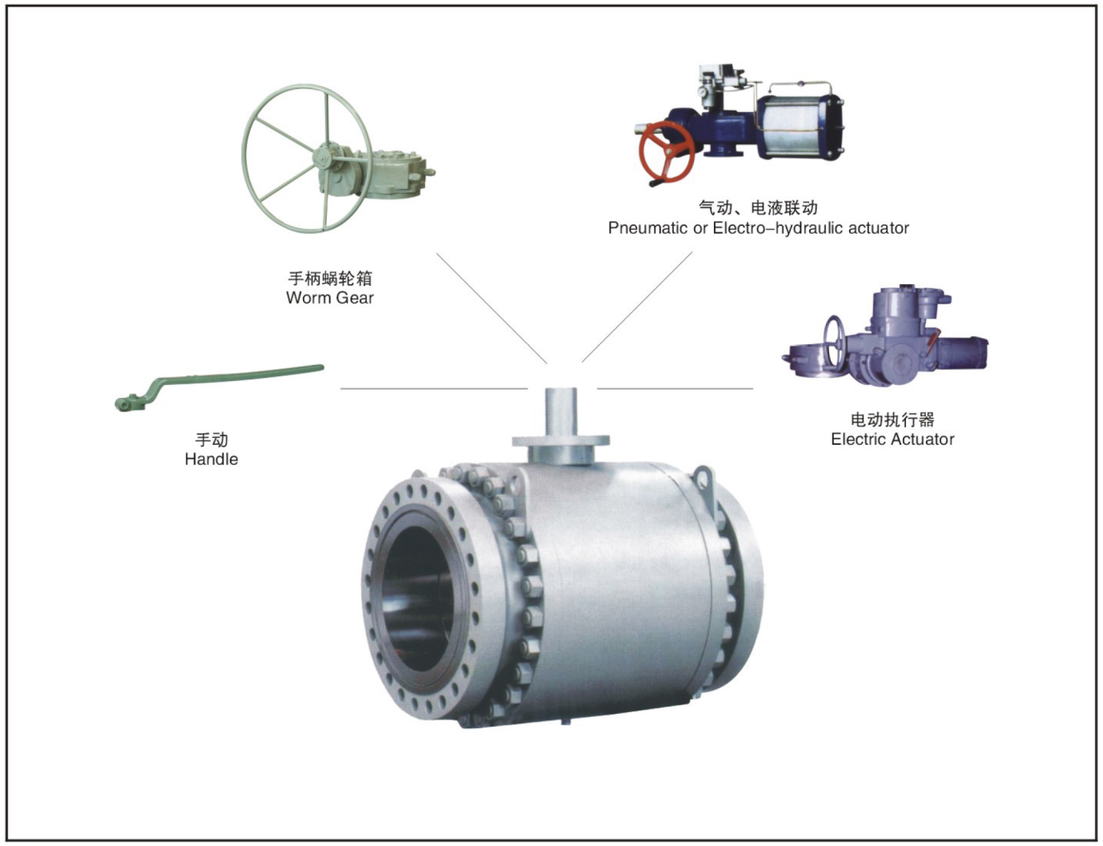

设计制造和检验标准：

API 6D《管道阀门》
API 608《法兰、螺纹和焊接连接的金属球阀》
ASME B16.1《阀门的结构长度》
ASME B16.34《法兰、螺纹和焊接端阀门》
NACE MR0175《油田设备用抗硫化应力的裂纹的金属材料》
ISO 5211《部分回转阀门驱动装置的连接》
ASME B16.5《管道法兰和法兰管件》
ASME B16.47《大直径钢质法兰》
MSS SP-44《钢制管法兰》
API 598《阀门的检验与试验》
API 607《转1/4周软阀座阀门的耐火实验》
API 6FA《阀门耐火实验规范》

锻钢固定球阀
Forged Trunnion Ball Valve

1	阀体	Body
2	球体	Ball
3	双头螺柱	Stud
4	防火垫圈	Anti-fire Washer
5	阀座	Seat
6	阀座支承圈	Seat Retainer
7	O型圈	"O" Ring
8	弹簧	Spring
9	O型圈	"O" Ring
10	防火密封垫片	Anti-fire Gasket
11	侧阀体	Bonnet
12	防静电钢球	Anti-static ball
13	防静电弹簧	Anti-static Spring
14	阀杆	Stem
15	平键	Key
16	滑动垫圈	Sliding Washer
17	滑动轴承	Stem Bearing
18	O型圈	"O" Ring
19	O型圈	"O" Ring
20	防火密封垫片	Anti-fire Gasket
21	压盖	Gland
22	内六角螺钉	Hexagon Screw
23	填料	Packing
24	连接盘	Terminal Area
25	内六角螺钉	Hexagon Screw
26	销	Pin
27	滑动垫片	Sliding Gasket
28	下阀杆	Lower Stem
29	双头螺栓柱	Stud
30	六角螺母	Hexagon Nut
31	排污塞	Drain Plug
32	放空阀	Release Valve
33	注脂阀	Sealant Fitting
34	止回阀	Check Valve
35	六角螺母	Hexagon Nut

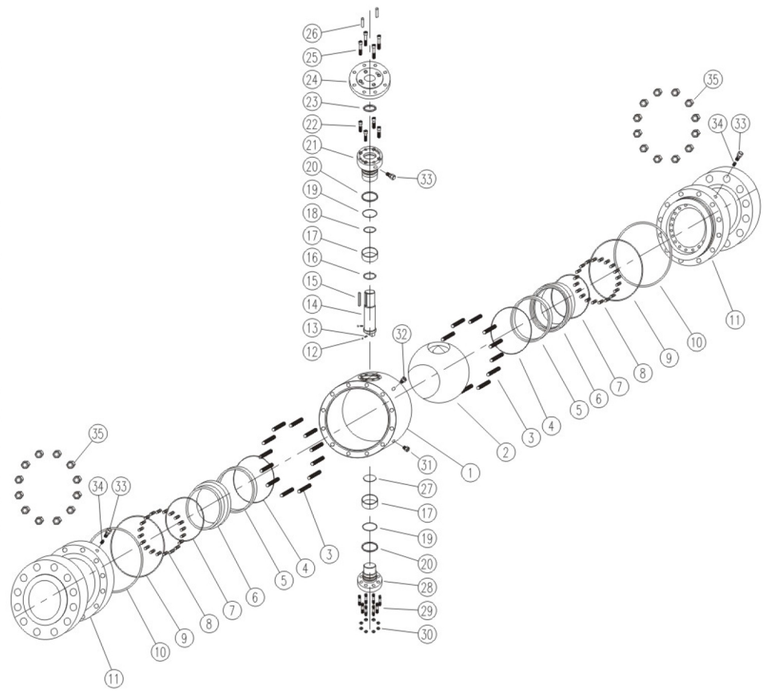

主要材质 Main Materials

零件名称 Part Name	A	B	C	D	E	F
阀体 Body	A105	A105	A105	F304	F316	LF2
阀座支承圈 Seat Retainer	A105+ENP	F304	F316	F304	F316	LF2+ENP
球体 Ball	A105+ENP	F304	F316	F304	F316	LF2+ENP
阀杆 Stem	A105+ENP	F304	F316	F304	F316	LF2+ENP
螺栓 Stud	B7M	B7M	B7M	B8M	B8M	L7M
螺母 Nut	2HM	2HM	2HM	8M	8M	7M
弹簧 Spring	17-7PH/INCONEL					
阀座 Seat	PTFE/PPL/NYLON/DEVLON					
O型圈 O Ring	VITON					
填料 Packing	GRAPHITE/PTFE					
防火密封垫片 Anti-fire Gasket	304+GRAPHITE					

锻钢浮动球阀
Forged Floating Ball Valve

1	阀体	Body
2	双头螺栓柱	Stud
3	球体	Ball
4	阀座	Seat
5	防火密封垫片	Anti-fire Gasket
6	侧阀体	Bonnet
7	防静电钢球	Anti-static ball
8	防静电弹簧	Anti-static Spring
9	阀杆	Stem
10	滑动垫圈	Sliding Washer
11	滑动轴承	Stem Bearing
12	O型圈	"O" Ring
13	防火密封垫片	Anti-fire Gasket
14	密封盖	Seal Cover
15	内六角螺钉	Hexagon Screw
16	填料	Packing
17	填料压盖	Packing Gland
18	内六角螺钉	Hexagon Screw
19	限位块	Stopper
20	弹性档圈	Elastic Back Ring
21	六角螺母	Hexagon Nut

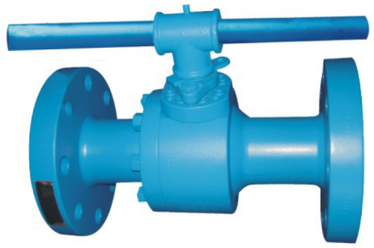

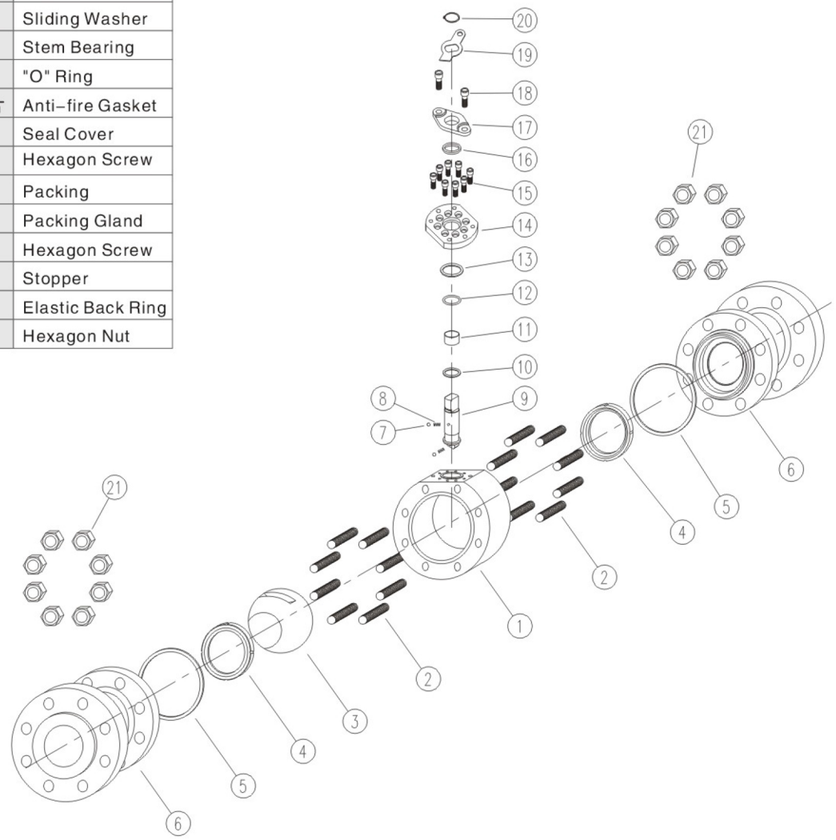

主要材质 Main Materials

零件名称 Part Name	A	B	C	D	E	F
阀体 Body	A105	A105	A105	F304	F316	LF2
球体 Ball	A105+ENP	F304	F316	F304	F316	LF2+ENP
阀杆 Stem	A105+ENP	F304	F316	F304	F316	LF2+ENP
螺栓 Stud	B7M	B7M	B7M	B8M	B8M	L7M
螺母 Nut	2HM	2HM	2HM	8M	8M	7M
阀座 Seat	PTFE/PPL/NYLON/DEVLON					
O型圈 O Ring	VITON					
填料 Packing	GRAPHITE/PTFE					
防火密封垫片 Anti-fire Gasket	304+GRAPHITE					

全焊接球阀
Full Welded Ball Valve

1	阀体	Body
2	防火垫圈	Anti-fire Washer
3	阀座	Seat
4	阀座支承圈	Seat Retainer
5	O型圈	"O" Ring
6	弹簧	Spring
7	侧阀体	Bonnet
8	注脂阀	Sealant Fitting
9	止回阀	Check Valve
10	球体	Ball
11	滑动垫圈	Slinding Washer
12	滑动轴承	Stem Bearing
13	销	Pin
14	支承板	Support plate
15	压盖	Gland
16	滑动垫圈	Sliding Washer
17	阀杆	Stem
18	平键	Key
19	滑动垫圈	Sliding Washer
20	防火密封垫片	Anti-fire Gasket
21	连接盘	Terminal Area
22	内六角螺钉	Hexagon Screw
23	填料	Packing
24	填料压盖	Packing Gland
25	防静电钢球	Anti-static Ball
26	防静电弹簧	Anti-static Spring
27	放空阀	Release Valve
28	排污塞	Drain plug

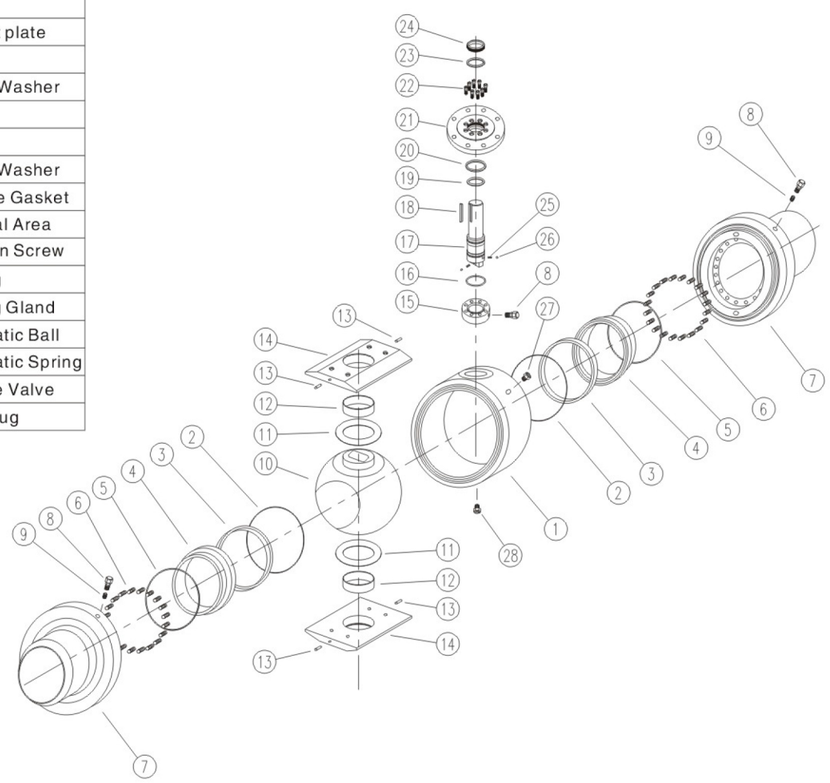

主要材质 Main Materials

零件名称 Part Name	A	B	C	D	E	F
阀体 Body	A105	A105	A105	F304	F316	LF2
阀座支承圈 Seat Retainer	A105+ENP	F304	F316	F304	F316	LF2+ENP
球体 Ball	A105+ENP	F304	F316	F304	F316	LF2+ENP
阀杆 Stem	A105+ENP	F304	F316	F304	F316	LF2+ENP
弹簧 Spring	17-7PH/INCONEL					
阀座 Seat	PTFE/PPL/NYLON/DEVLON					
O型圈 O Ring	VITON					
填料 Packing	GRAPHITE/PTFE					
防火密封垫片 Anti-fire Gasket	304+GRAPHITE					

铸钢固定球阀
Cast Trunnion Ball Valve

1	阀体	Body
2	侧阀体	Bonnet
3	球体	Ball
4	防火垫圈	Anti-fire Washer
5	阀座	Seat
6	阀座支承圈	Seat Retainer
7	O型圈	"O" Ring
8	弹簧	Spring
9	O型圈	"O" Ring
10	防火密封垫片	Anti-fire Gasket
11	六角螺母	Hexagon Nut
12	注脂阀	Sealant Fitting
13	止回阀	Check Valve
14	放空阀	Release Valve
15	防静电钢球	Anti-static Ball
16	防静电弹簧	Anti-static Spring
17	双头螺柱	Stud
18	平键	Key
19	阀杆	Stem
20	滑动轴承	Stem Bearing
21	止推垫圈	Thrust Bearing
22	O型圈	"O" Ring
23	O型圈	"O" Ring
24	防火密封垫片	Anti-fire Gasket
25	压盖	Gland
26	内六角螺钉	Hexagon Screw
27	填料	Packing
28	填料压盖	Packing Gland
29	下阀杆	Lower Stem
30	滑动垫片	Sliding Gasket
31	底盖	Lower Cover
32	双头螺栓柱	Stud
33	六角螺母	Hexagon Nut
34	排污塞	Drain plug

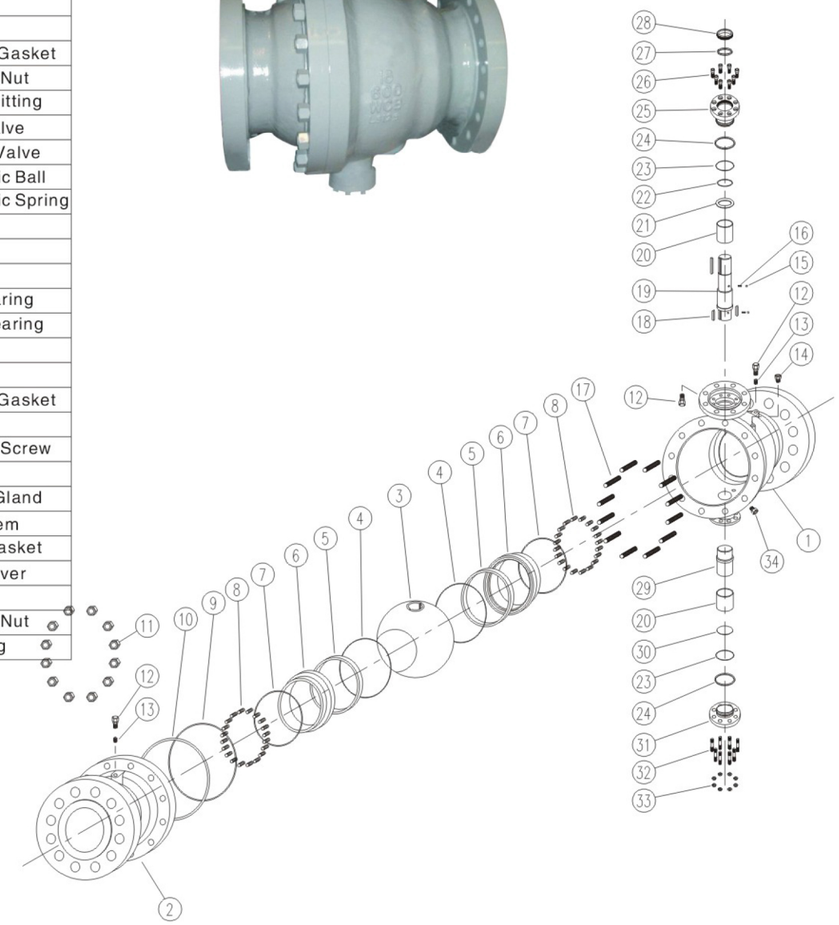

主要材质 Main Materials

零件名称 Part Name	A	B	C	D	E	F
阀体 Body	WCB	WCB	WCB	CF8	CF8M	LCC
阀座支承圈 Seat Retainer	A105+ENP	F304	F316	F304	F316	LF2+ENP
球体 Ball	A105+ENP	F304	F316	F304	F316	LF2+ENP
阀杆 Stem	A105+ENP	F304	F316	F304	F316	LF2+ENP
螺栓 Stud	B7M	B7M	B7M	B8M	B8M	L7M
螺母 Nut	2HM	2HM	2HM	8M	8M	7M
弹簧 Spring	17-7PH/INCONEL					
阀座 Seat	PTFE/PPL/NYLON/DEVLON					
O型圈 O Ring	VITON					
填料 Packing	GRAPHITE/PTFE					
防火密封垫片 Anti-fire Gasket	304+GRAPHITE					

铸钢浮动球阀
Cast Floating Ball Valve

1	阀体	Body
2	双头螺栓柱	Stud
3	阀座	Seat
4	球体	Ball
5	防火密封垫片	Anti-fire Gasket
6	侧阀体	Bonnet
7	六角螺母	Hexagon Nut
8	防静电钢球	Anti-static Ball
9	防静电弹簧	Anti-static Spring
10	阀杆	Stem
11	滑动垫圈	Sliding Washer
12	滑动轴承	Stem Bearing
13	填料	Packing
14	填料压盖	Packing Gland
15	内六角螺钉	Hexagon Screw
16	限位块	Stopper
17	弹性档圈	Elastic Back Ring

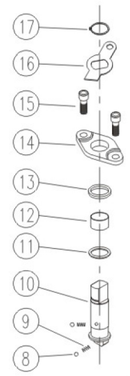

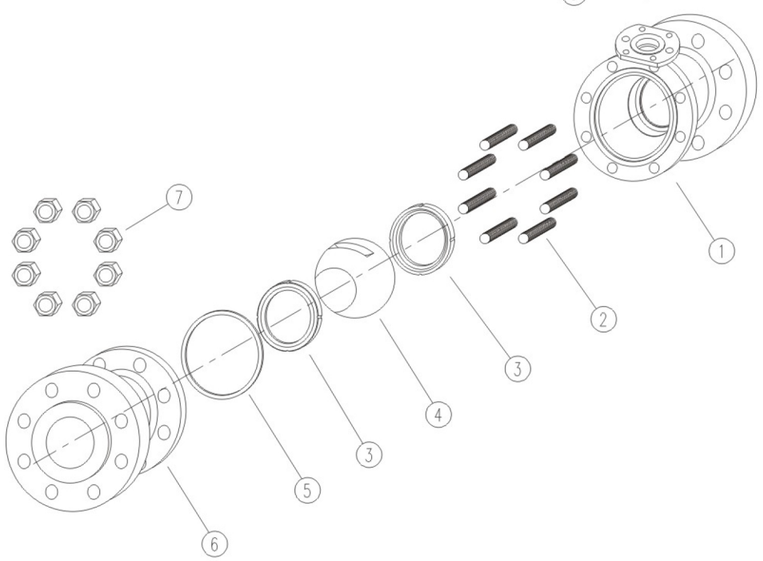

主要材质 Main Materials

零件名称 Part Name	A	B	C	D	E	F
阀体 Body	WCB	WCB	WCB	CF8	CF8M	LCC
球体 Ball	A105+ENP	F304	F316	F304	F316	LF2+ENP
阀杆 Stem	A105+ENP	F304	F316	F304	F316	LF2+ENP
螺栓 Stud	B7M	B7M	B7M	B8M	B8M	L7M
螺母 Nut	2HM	2HM	2HM	8M	8M	7M
阀座 Seat	PTFE/PPL/NYLON/DEVLON					
O型圈 O Ring	VITON					
填料 Packing	GRAPHITE/PTFE					
防火密封垫片 Anti-fire Gasket	304+GRAPHITE					

上装式球阀
Top Entry Ball Valve

1	阀体	Body
2	球体	Ball
3	阀座	Seat
4	阀座支承圈	Seat Retainer
5	O型圈	"O" Ring
6	弹簧	Spring
7	防火垫圈	Anti-fire Washer
8	防静电钢球	Anti-static Ball
9	防静电弹簧	Anti-static Spring
10	O型圈	"O" Ring
11	滑动轴承	Stem Bearing
12	滑动垫圈	Sliding Washer
13	O型圈	"O" Ring
14	防火密封垫片	Anti-fire Gasket
15	阀盖	Bonnet
16	双头螺栓柱	Stud
17	六角螺母	Hexagon Nut
18	填料	Packing
19	填料压盖	Packing Gland
20	内六角螺钉	Hexagon Screw
21	平键	Key
22	滑动垫片	Sliding Gasket
23	防火密封垫片	Anti-fire Gasket
24	底盖	Lower Cover
25	止回阀	Check Valve
26	注脂阀	Sealant Fitting
27	密封垫片	Gasket
28	内六角螺钉	Hexagon Screw
29	放空阀	Release Valve
30	排污塞	Drain Plug

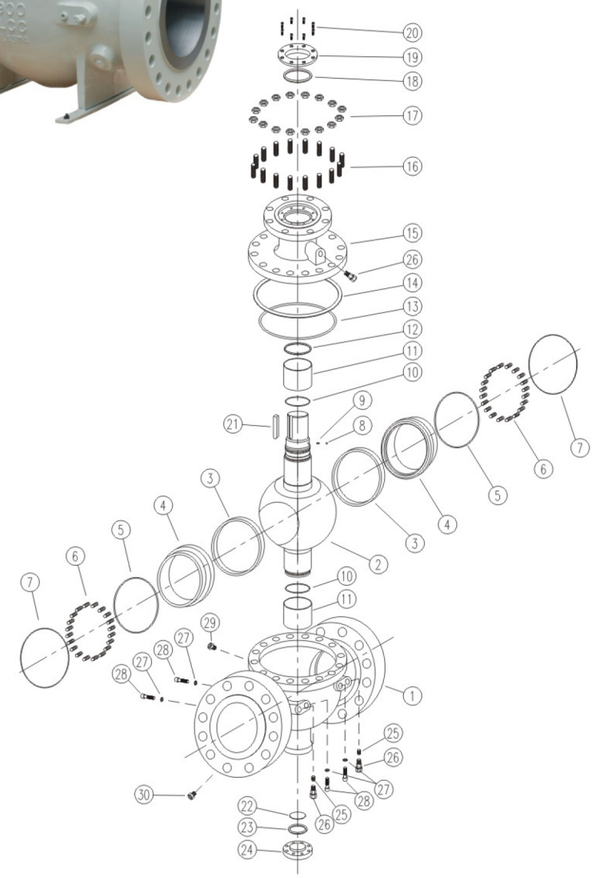

主要材质 Main Materials

零件名称 Part Name	A	B	C	D	E	F
阀体 Body	WCB	WCB	WCB	CF8	CF8M	LCC
阀座支承圈 Seat Retainer	A105+ENP	F304	F316	F304	F316	LF2+ENP
球体 Ball	A105+ENP	F304	F316	F304	F316	LF2+ENP
阀杆 Stem	A105+ENP	F304	F316	F304	F316	LF2+ENP
螺栓 Stud	B7M	B7M	B7M	B8M	B8M	L7M
螺母 Nut	2HM	2HM	2HM	8M	8M	7M
弹簧 Spring	17-7PH/INCONEL					
阀座 Seat	PTFE/PPL/NYLON/DEVLON					
O型圈 O Ring	VITON					
填料 Packing	GRAPHITE/PTFE					
防火密封垫片 Anti-fire Gasket	304+GRAPHITE					

一片式浮动球阀
One Piece Floating Ball Valve

1	阀体	Body
2	阀座	Seat
3	球体	Ball
4	O型圈	O Ring
5	防火密封垫片	Anti-fire Gasket
6	阀座压环	Seal Ring
7	防静电钢球	Anti-static Ball
8	防静电弹簧	Anti-static Spring
9	阀杆	Stem
10	滑动垫圈	Sliding Washer
11	滑动轴承	Stem Bearing
12	填料	Packing
13	填料压盖	Packing Gland
14	内六角螺钉	Hexagon Screw
15	限位块	Stopper
16	弹性档圈	Elastic Back Ring

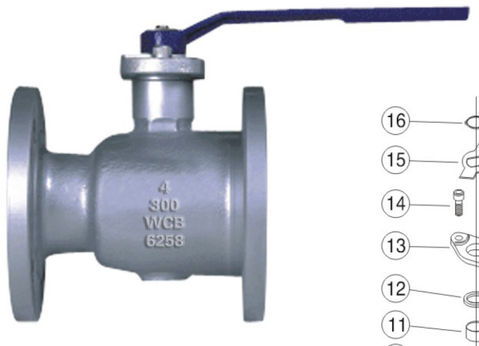

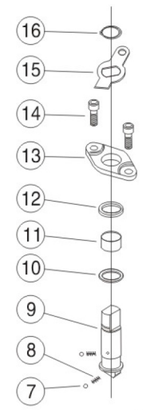

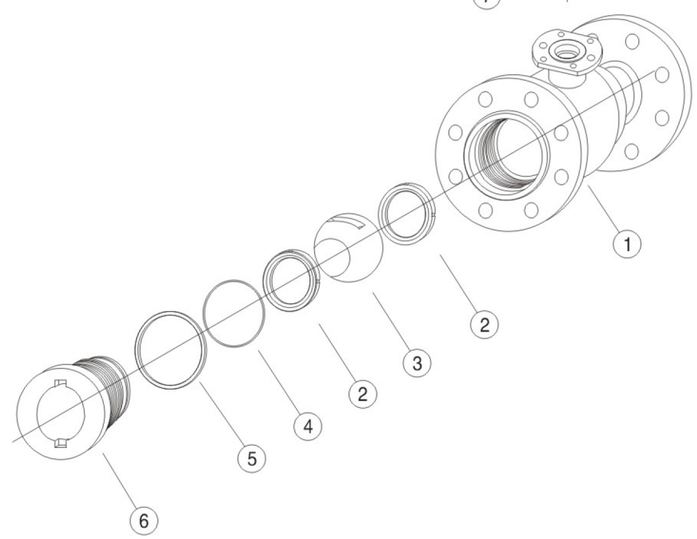

主要材质 Main Materials

零件名称 Part Name	A	B	C	D	E	F
阀体 Body	WCB	WCB	WCB	CF8	CF8M	LCC
球体 Ball	A105+ENP	F304	F316	F304	F316	LF2+ENP
阀杆 Stem	A105+ENP	F304	F316	F304	F316	LF2+ENP
阀座 Seat	PTFE/PPL/NYLON/DEVLON					
O型圈 O Ring	VITON					
填料 Packing	GRAPHITE/PTFE					
防火密封垫片 Anti-fire Gasket	304+GRAPHITE					

NPT内螺纹连接球阀
NPT Ball Valve

1	阀体	Body
2	双头螺栓	Stud
3	球体	Ball
4	阀座	Seat
5	防火密封垫片	Anti-fire Gasket
6	侧阀体	Bonnet
7	防静电钢球	Anti-static Ball
8	防静电弹簧	Anti-static Spring
9	定位销	Pin
10	阀杆	Stem
11	滑动垫圈	Sliding Washer
12	填料	Packing
13	填料压环	Packing Ring
14	蝶型弹簧	Butterfly spring
15	六角螺母	Hexagon nut
16	限位块	Stopper
17	手柄	Lever
18	六角螺母	Hexagon nut

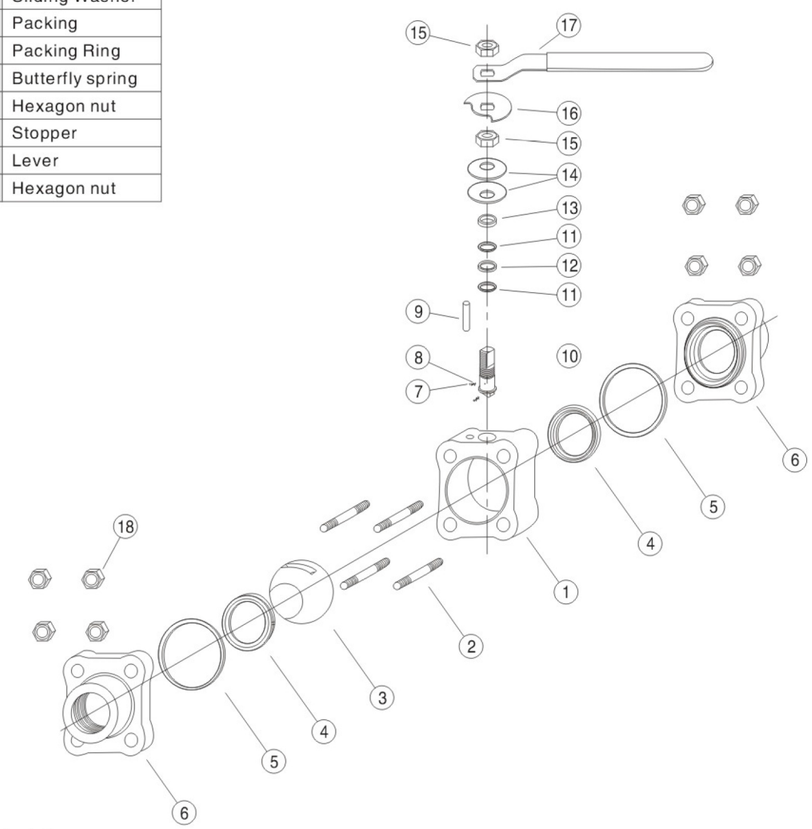

主要材质 Main Materials

零件名称 Part Name	A	B	C	D	E	F
阀体 Body	WCB	WCB	WCB	CF8	CF8M	LCC
球体 Ball	A105+ENP	F304	F316	F304	F316	LF2+ENP
阀杆 Stem	A105+ENP	F304	F316	F304	F316	LF2+ENP
螺栓 Stud	B7M	B7M	B7M	B8M	B8M	L7M
螺母 Nut	2HM	2HM	2HM	8M	8M	7M
阀座 Seat	PTFE/PPL/NYLON/DEVLON					
填料 Packing	GRAPHITE/PTFE					
防火密封垫片 Anti-fire Gasket	304+GRAPHITE					

对夹V型球阀
Wafer V Type Ball Valve

1	阀体	Body
2	阀座	Seat
3	O型圈	O Ring
4	平板弹簧	Flat Spring
5	防火垫圈	Anti-fire Washer
6	阀盖	Bonnet
7	内六角螺钉	Hexagon Screw
8	球体	Ball
9	直销	Pin
10	阀杆	Stem
11	平键	Key
12	滑动轴承	Stem Bearing
13	填料	Packing
14	填料压盖	Packing Gland
15	内六角螺钉	Hexagon Screw
16	下阀杆	Lower Stem
17	滑动垫片	Sliding Gasket
18	防火密封垫片	Anti-fire Gasket
19	底盖	Lower Cover

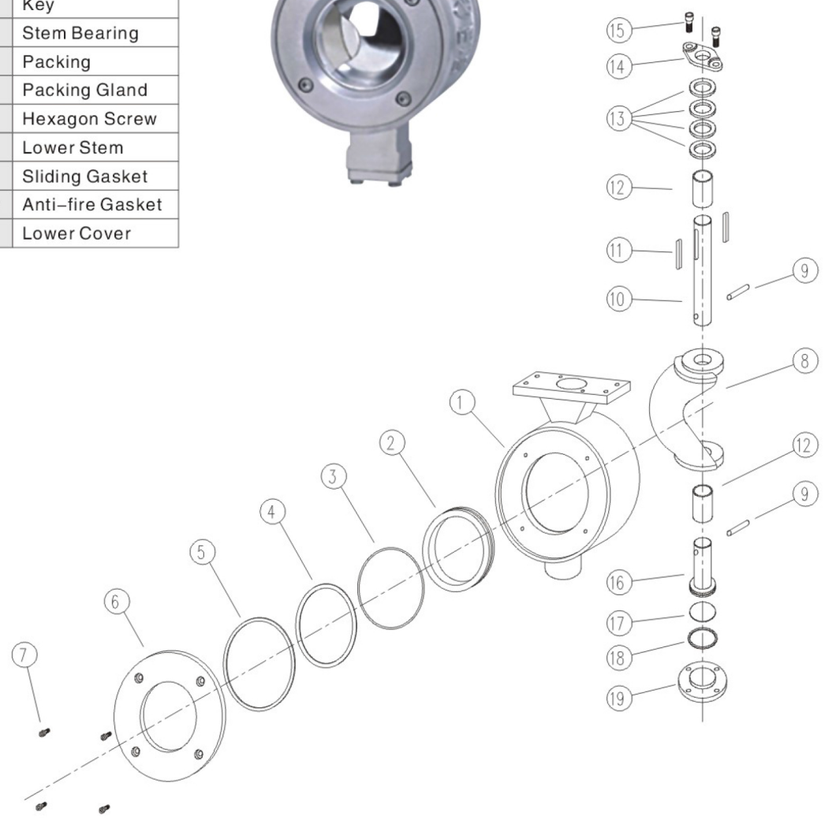

主要材质 Main Materials

零件名称 Part Name	A	B	C	D	E	F
阀体 Body	WCB	WCB	WCB	CF8	CF8M	LCC
阀座 Seat	A105+STL	F304+STL	F316+STL	F304+STL	F316+STL	LF2+STL
球体 Ball	A105+STL	F304+STL	F316+STL	F304+STL	F316+STL	LF2+STL
阀杆 Stem	A105+ENP	F304	F316	F304	F316	LF2+ENP
螺柱 Stud	B7M	B7M	B7M	B8M	B8M	L7M
螺母 Nut	2HM	2HM	2HM	8M	8M	7M
弹簧 Spring	17-7PH					
O型圈 O Ring	VITON					
填料 Packing	GRAPHITE					
防火密封垫片 Anti-fire Gasket	304+GRAPHITE					

三通四密封固定球阀
3-Way Trunnion Ball Valve

1	阀体	Body
2	双头螺柱	Stud
3	阀座	Seat
4	阀座支承圈	Seat Retainer
5	O型圈	O Ring
6	防火垫圈	Anti-fire Washer
7	弹簧	Spring
8	防火密封垫片	Anti-fire Gasket
9	O型圈	O Ring
10	侧阀体	Bonnet
11	六角螺母	Hexagon Nut
12	球体	Ball
13	阀盖	Bonnet
14	平键	Key
15	阀杆	Stem
16	滑动轴承	Stem Bearing
17	止推垫圈	Thrust Bearing
18	O型圈	O Ring
19	防火密封垫片	Anti-fire Gasket
20	压盖	Gland
21	内六角螺钉	Hexagon Screw
22	填料	Packing
23	填料压盖	Packing Gland
24	排污塞	Drain Plug
25	滑动垫片	Sliding Gasket
26	下阀杆	Lower Stem
27	底盖	Lower Cover
28	注脂阀	Sealant Fitting
29	防静电钢球	Anti-static Ball
30	防静电弹簧	Anti-static Spring

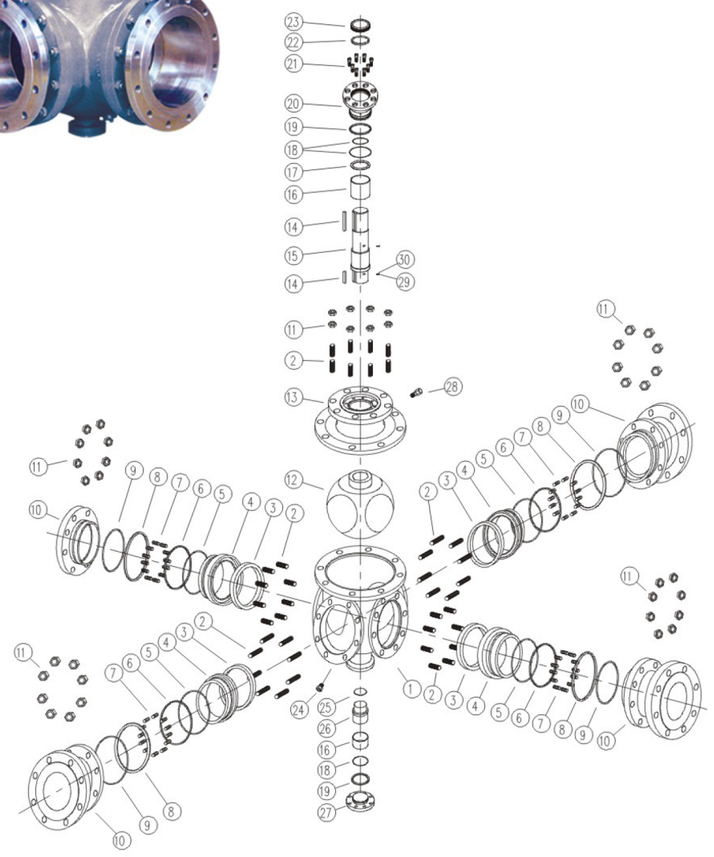

主要材质 Main Materials

零件名称 Part Name	A	B	C	D	E	F
阀体 Body	WCB	WCB	WCB	CF8	CF8M	LCC
阀座支承圈 Seat Retainer	A105+FNP	F304	F316	F304	F316	LF2+ENP
球体 Ball	A105+FNP	F304	F316	F304	F316	LF2+ENP
阀杆 Stem	A105+FNP	F304	F316	F304	F316	LF2+ENP
螺柱 Stud	B7M	B7M	B7M	B8M	B8M	L7M
螺母 Nut	2HM	2HM	2HM	8M	8M	7M
弹簧 Spring	17-7PH/INCONEL					
阀座 Seat	PTFE/PPL/NYLON/DEVLON					
O型圈 O Ring	VITON					
填料 Packing	GRAPHITE/PTFE					
防火密封垫片 Anti-fire Gasket	304+GRAPHITE					

轨道球阀
Orbit Ball Valve

1	阀体	Body
2	阀座	Seat
3	球体	Ball
4	上轴套	Upper Bearing Sleeve
5	双头螺栓柱	Stud
6	六角螺母	Hexagon Nut
7	阀盖	Bonnet
8	阀杆	Stem
9	平面轴承	Flat Bearing
10	阀杆螺母	Stem Nut
11	螺母压盖	Nut Gland
12	手轮	Handwheel
13	小圆螺母	Orbed Nut
14	填料压盖	Packing Gland
15	填料压环	Packing Ring
16	填料	Packing
17	隔离环	Isolating Ring
18	六角螺母	Hexagon Nut
19	平垫圈	Flat Washer
20	活结螺栓	Eye Bolt
21	销轴	Hinge Pin
22	开口销	Outlet Pin
23	油杯	Grease Cup
24	紧定螺钉	Stop Screw
25	六角螺母	Hexagon Nut
26	盖型螺母	Gland Nut
27	注脂阀	Sealant Fitting
28	圆柱销	Cylindrical Pin
29	下轴套	Lower Bearing Sleeve
30	防火密封垫片	Anti-fire Gasket

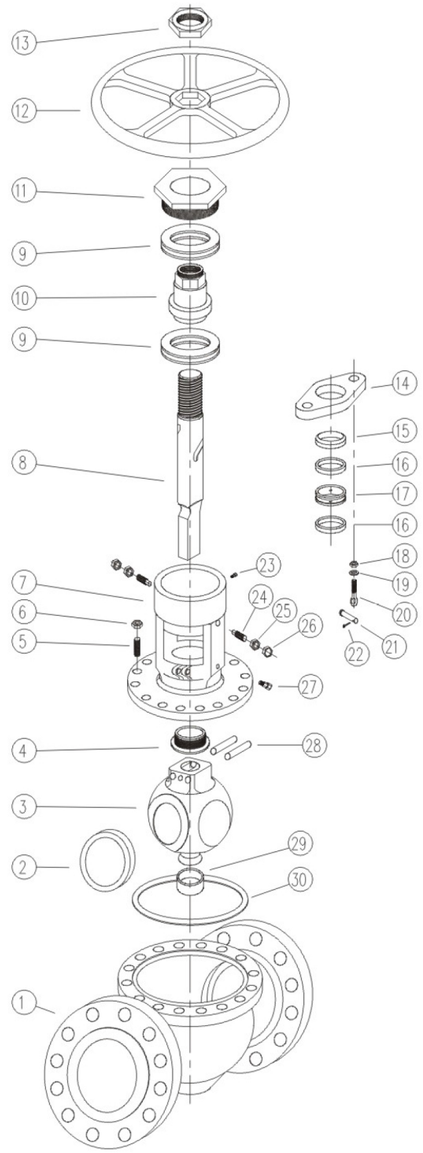

主要材质 Main Materials

零件名称 Part Name	A	B	C	D	E	F
阀体 Body	WCB	WCB	WCB	CF8	CF8M	LCC
阀座 Seat	A105+STL	A304+STL	A316+STL	A304+STL	A316+STL	LF2+STL
球体 Ball	A105+STL	A304+STL	A316+STL	A304+STL	A316+STL	LF2+STL
阀杆 Stem	A105+ENP	A304	A316	A304	A316	LF2+ENP
螺柱 Stud	B7M	B7M	B7M	B8M	B8M	L7M
螺母 Nut	2HM	2HM	2HM	8M	8M	7M
填料 Packing						
防火密封垫片 Anti-fire Gasket	304+GRAPHITE					

硬密封浮动球阀
Metal To Metal Floating Ball Valve

1	阀体	Body
2	双头螺栓柱	Stud
3	石墨垫圈	Graphite Washer
4	后阀座	Seat
5	球体	Ball
6	前阀座	Back Seat
7	平板弹簧	Flat Spring
8	防火密封垫片	Anti-fire Gasket
9	侧阀体	Bonnet
10	六角螺母	Hexagon Nut
11	阀杆	Stem
12	滑动垫圈	Sliding Washer
13	滑动轴承	Stem Bearing
14	填料	Packing
15	填料压盖	Packing Gland
16	内六角螺钉	Hexagon Screw
17	限位块	Stopper
18	弹性档圈	Elastic Back Ring

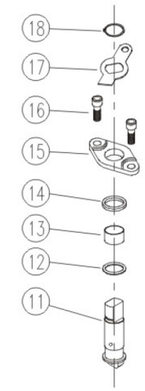

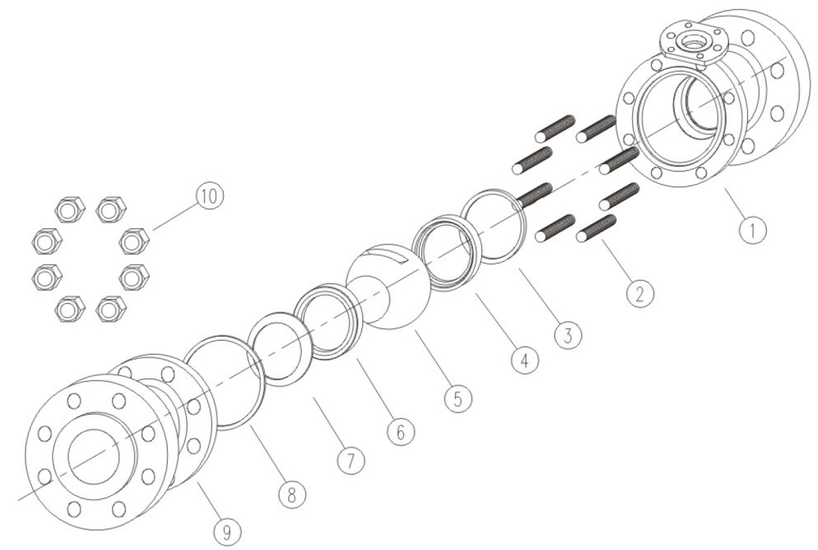

主要材质 Main Materials

零件名称 Part Name	A	B	C	D	E	F
阀体 Body	WCB	WCB	WCB	CF8	CF8M	LCC
球体 Ball	A105+STL	F304+STL	F316+STL	F304+STL	F316+STL	LF2+STL
阀座 Seat	A105+STL	F304+STL	F316+STL	F304+STL	F316+STL	LF2+STL
阀杆 Stem	A105+ENP	F304	F316	F304	F316	LF2+ENP
螺栓 Stud	B7M	B7M	B7M	B8M	B8M	L7M
螺母 Nut	2HM	2HM	2HM	8M	8M	7M
石墨垫圈 Graphite Washer	GRAPHITE					
填料 Packing	GRAPHITE					
防火密封垫片 Anti-fire Gasket	304+GRAPHITE					

ANSI Class 150
285 psi

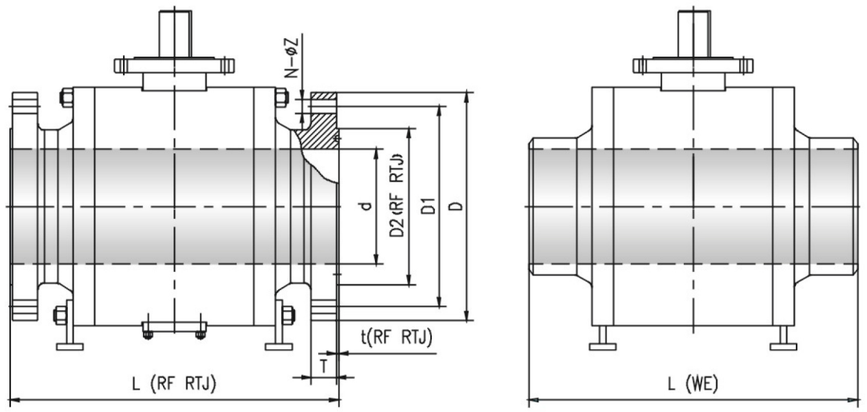

公称尺寸 Nominal Size		凸 面 连 接 (RF)								环 连 接 (RTJ)				对焊连接 (BW)
DN	NPS	d	L(RF)	D	D1	D2(RF)	T	t(RF)	N-ΦZ	L(RTJ)	D2(RTJ)	t(RTJ)	R	L(WE)
25	1	25	127	110	79.5	51	11	2.0	4-Φ15	140	64	6.4	R15	165
32	1 1/4	32	140	115	89	64	11	2.0	4-Φ15	153	73	6.4	R17	178
40	1 1/2	38	165	125	98.5	73	13	2.0	4-Φ15	178	83	6.4	R19	190
50	2	49	178	150	120.5	92	14	2.0	4-Φ19	191	102	6.4	R22	216
65	2 1/2	62	191	180	139.5	105	16	2.0	4-Φ19	203	121	6.4	R25	241
80	3	74	203	190	152.5	127	17	2.0	4-Φ19	216	133	6.4	R29	283
100	4	100	229	230	190.5	157	22	2.0	8-Φ19	241	171	6.4	R36	305
150	6	150	394	280	241.5	216	24	2.0	8-Φ22	406	219	6.4	R43	457
200	8	201	457	345	298.5	270	27	2.0	8-Φ22	470	273	6.4	R48	521
250	10	252	533	405	362	324	29	2.0	12-Φ25	546	330	6.4	R52	559
300	12	303	610	485	432	381	30	2.0	12-Φ25	622	406	6.4	R56	635
350	14	334	686	535	476	413	33	2.0	12-Φ28.5	699	425	6.4	R59	762
400	16	385	762	600	540	470	35	2.0	16-Φ28.5	775	483	6.4	R64	838
450	18	436	864	635	578	533	38	2.0	16-Φ32	876	546	6.4	R68	914
500	20	487	914	700	635	584	41	2.0	20-Φ32	927	597	6.4	R72	991
550	22	538	1016	750	692	641	44	2.0	20-Φ35	–	–	–	–	1092
600	24	589	1067	815	749.5	692	46	2.0	20-Φ35	1080	711	6.4	R76	1143
650	26	633	1143	870	806.5	749	67	2.0	24-Φ35	–	–	–	–	1245
700	28	684	1245	925	863.6	800	70	2.0	28-Φ35	–	–	–	–	1346
750	30	735	1295	985	914.4	857	73	2.0	28-Φ35	–	–	–	–	1397
800	32	779	1372	1060	978	914	79	2.0	28-Φ41	–	–	–	–	1524
850	34	830	1473	1110	1028.7	965	81	2.0	32-Φ41	–	–	–	–	1626
900	36	874	1524	1170	1086	1022	89	2.0	32-Φ41	–	–	–	–	1727
950	38	925	1840	1240	1149.4	1073	86	2.0	32-Φ41	–	–	–	–	–
1000	40	976	1900	1290	1200	1124	89	2.0	36-Φ41	–	–	–	–	–
1050	42	1020	2050	1346	1257.3	1194	95	2.0	36-Φ41	–	–	–	–	–
1150	46	1120	2100	1455	1365.3	1295	103	2.0	40-Φ41	–	–	–	–	–
1200	48	1166	2180	1511	1422.4	1359	106	2.0	44-Φ41	–	–	–	–	–

ANSI Class 300
740 psi

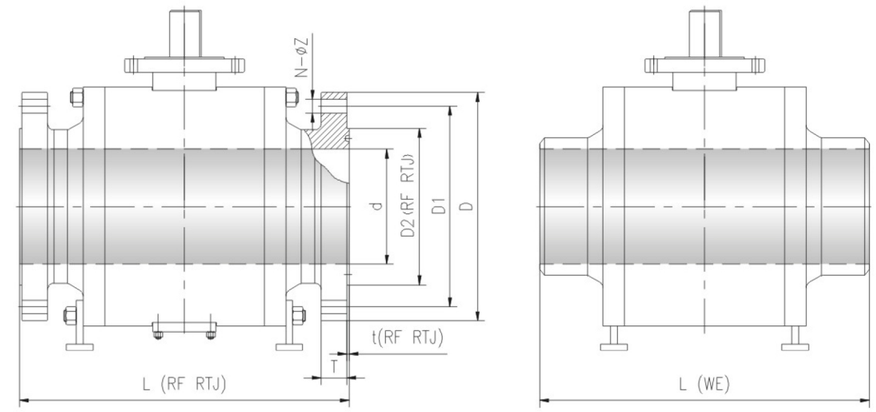

公称尺寸 Nominal Size		凸 面 连 接 (RF)								环 连 接 (RTJ)				对焊连接 (BW)
DN	NPS	d	L(RF)	D	D1	D2(RF)	T	t(RF)	N-ΦZ	L(RTJ)	D2(RTJ)	t(RTJ)	R	L(WE)
25	1	25	165	125	89	51	16	2.0	4-Φ19	178	70	6.4	R16	165
32	1 1/4	32	178	135	98.5	64	17	2.0	4-Φ19	191	79	6.4	R18	178
40	1 1/2	38	190	155	114.5	73	19	2.0	4-Φ22	203	90	6.4	R20	190
50	2	49	216	165	127	92	21	2.0	8-Φ19	232	108	8	R23	216
65	2 1/2	62	241	190	149	105	24	2.0	8-Φ22	257	127	8	R26	241
80	3	74	283	210	168.5	127	27	2.0	8-Φ22	298	146	8	R31	283
100	4	100	305	255	200	157	30	2.0	8-Φ22	321	175	8	R37	305
150	6	150	403	320	270	216	35	2.0	12-Φ22	419	241	8	R45	403
200	8	201	502	380	330	270	40	2.0	12-Φ25	518	302	8	R49	521
250	10	252	568	445	387.5	324	46	2.0	16-Φ28.5	584	356	8	R53	559
300	12	303	648	520	451	381	49	2.0	16-Φ32	664	413	8	R57	635
350	14	334	762	585	514.5	413	52	2.0	20-Φ32	778	457	8	R61	762
400	16	385	838	650	571.5	470	56	2.0	20-Φ35	854	508	8	R65	838
450	18	436	914	710	628.5	533	59	2.0	24-Φ35	930	575	8	R69	914
500	20	487	991	775	686	584	62	2.0	24-Φ35	1010	635	9.5	R73	991
550	22	538	1092	840	743	641	65	2.0	24-Φ41	1114	685	11.2	R81	1092
600	24	589	1143	915	813	692	68	2.0	24-Φ41	1165	749	11.2	R77	1143
650	26	633	1245	970	876.3	749	78	2.0	28-Φ44.5	1270	810	12.7	R93	1245
700	28	684	1346	1035	940	800	84	2.0	28-Φ44.5	1372	861	12.7	R94	1346
750	30	735	1397	1090	997	857	90	2.0	28-Φ48	1422	918	12.7	R95	1397
800	32	779	1524	1150	1054	914	97	2.0	28-Φ51	1553	984	14.3	R96	1524
850	34	830	1626	1205	1105	965	100	2.0	28-Φ51	1654	1035	14.3	R97	1626
900	36	874	1727	1270	1168.4	1022	103	2.0	32-Φ54	1756	1092	14.3	R98	1727
950	38	925	1840	1170	1092	1029	106	2.0	32-Φ41.3	–	–	–	–	–
1000	40	976	1900	1240	1155.7	1086	113	2.0	32-Φ44.5	–	–	–	–	–
1050	42	1020	2050	1290	1206.5	1137	118	2.0	32-Φ44.5	–	–	–	–	–
1150	46	1120	2100	1415	1320.8	1245	129	2.0	28-Φ51	–	–	–	–	–
1200	48	1166	2180	1465	1371.6	1302	132	2.0	32-Φ51	–	–	–	–	–

ANSI Class 600
1480 psi

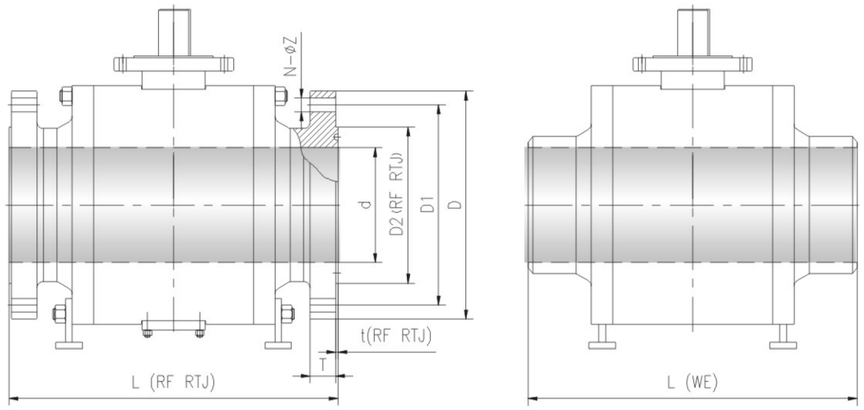

公称尺寸 Nominal Size		凸 面 连 接 (RF)								环 连 接 (RTJ)				对焊连接 (BW)
DN	NPS	d	L(RF)	D	D1	D2(RF)	T	t(RF)	N-ΦZ	L(RTJ)	D2(RTJ)	t(RTJ)	R	L(WE)
25	1	25	216	125	89	51	18	7.0	4-Φ19	216	70	6.4	R16	216
32	1 1/4	32	229	135	98.5	64	21	7.0	4-Φ19	229	79	6.4	R18	229
40	1 1/2	38	241	155	114.5	73	23	7.0	4-Φ22	241	90	6.4	R20	241
50	2	49	292	165	127	92	26	7.0	8-Φ19	295	108	8	R23	292
65	2 1/2	62	330	190	149	105	29	7.0	8-Φ22	333	127	8	R26	330
80	3	74	356	210	168.5	127	32	7.0	8-Φ22	359	146	8	R31	356
100	4	100	432	275	216	157	38	7.0	8-Φ25	435	175	8	R37	432
150	6	150	559	355	292	216	48	7.0	12-Φ29	562	241	8	R45	559
200	8	201	660	420	349	270	56	7.0	12-Φ32	664	302	8	R49	660
250	10	252	787	510	432	324	64	7.0	16-Φ35	791	356	8	R53	787
300	12	303	838	560	489	381	67	7.0	20-Φ35	841	413	8	R57	838
350	14	334	889	605	527	413	70	7.0	20-Φ38	892	457	8	R61	889
400	16	385	991	685	603	470	77	7.0	20-Φ41	994	508	8	R65	991
450	18	436	1092	745	654	533	83	7.0	20-Φ44	1095	575	8	R69	1092
500	20	487	1194	815	724	584	89	7.0	20-Φ44	1200	635	9.5	R73	1194
550	22	538	1295	870	777.7	641	95	7.0	24-Φ48	1305	685	11.2	R81	1295
600	24	589	1397	940	838	692	102	7.0	24-Φ52	1407	749	11.2	R77	1397
650	26	633	1448	1015	914.4	749	108	7.0	28-Φ51	1461	810	12.7	R93	1448
700	28	684	1549	1075	965	800	111	7.0	28-Φ54	1562	861	12.7	R94	1549
750	30	735	1651	1130	1022.4	857	114	7.0	28-Φ54	1664	918	12.7	R95	1651
800	32	779	1778	1195	1073	914	117	7.0	28-Φ60.5	1794	984	14.3	R96	1778
850	34	830	1930	1245	1130.3	965	121	7.0	28-Φ60.5	1946	1035	14.3	R97	1930
900	36	874	2083	1315	1194	1022	124	7.0	28-Φ66.5	2099	1092	14.3	R98	2083
950	38	925	1900	1270	1162	1054	152	7.0	28-Φ60.5	–	–	–	–	–
1000	40	976	1960	1320	1213	1111	159	7.0	32-Φ60.5	–	–	–	–	–
1050	42	1020	2100	1405	1282.7	1168	168	7.0	28-Φ66.5	–	–	–	–	–
1150	46	1120	2180	1510	1390.7	1276	179	7.0	32-Φ66.5	–	–	–	–	–
1200	48	1166	2400	1595	1460.5	1333	189	7.0	32-Φ73	–	–	–	–	–

ANSI Class 900
2220 psi

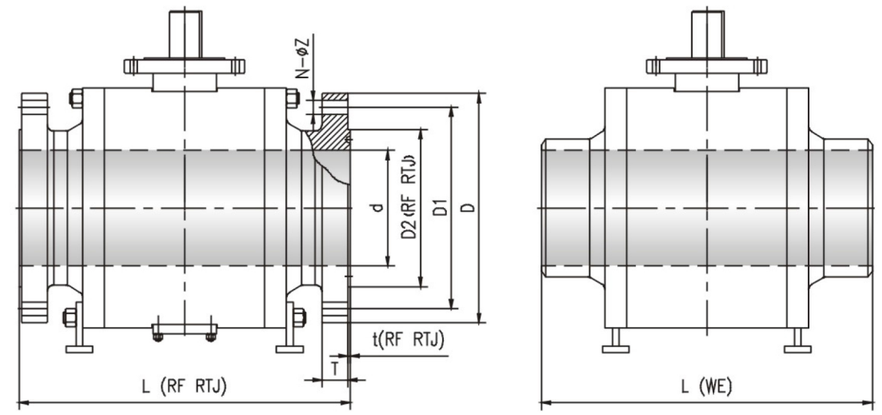

公称尺寸 Nominal Size		凸 面 连 接 (RF)								环 连 接 (RTJ)				对焊连接 (BW)
DN	NPS	d	L(RF)	D	D1	D2(RF)	T	t(RF)	N-ΦZ	L(RTJ)	D2(RTJ)	t(RTJ)	R	L(WE)
25	1	25	254	150	101.6	51	28.4	7.0	4-Φ25.5	254	71.5	6.4	R16	254
32	1 1/4	32	279	160	111	64	28.4	7.0	4-Φ25.5	279	81	6.4	R18	279
40	1 1/2	38	305	180	123.8	73	31.7	7.0	4-Φ28.5	305	92	6.4	R20	305
50	2	49	368	215	165	92	38.5	7.0	8-Φ26	371	124	7.9	R24	368
65	2 1/2	62	419	245	190.5	105	41.5	7.0	8-Φ29	422	137	7.9	R27	419
80	3	74	381	240	190.5	127	38.5	7.0	8-Φ26	384	156	7.9	R31	381
100	4	100	457	290	234.9	157	44.5	7.0	8-Φ32	460	181	7.9	R37	457
150	6	150	610	380	317.5	216	56	7.0	12-Φ32	613	241	7.9	R45	610
200	8	201	737	470	393.7	270	63.5	7.0	12-Φ39	740	308	7.9	R49	737
250	10	252	838	545	469.9	324	70	7.0	16-Φ39	841	362	7.9	R53	838
300	12	303	965	610	533.4	381	79.5	7.0	20-Φ39	968	419	7.9	R57	965
350	14	322	1029	640	558.8	413	86	7.0	20-Φ42	1038	467	11.1	R62	1029
400	16	373	1130	705	615.9	470	89	7.0	20-Φ45	1140	524	11.1	R66	1130
450	18	423	1219	785	685.8	533	102	7.0	20-Φ51	1232	594	12.7	R70	1219
500	20	471	1321	855	749.3	584	108	7.0	20-Φ54	1334	648	12.7	R74	1321
600	24	570	1549	1040	901.7	692	140	7.0	20-Φ67	1568	772	15.9	R78	1549
650	26	617	1727	1085	952.5	749	140	7.0	20-Φ73	1749	832	17.5	R100	1727
700	28	665	1753	1170	1022.4	800	143	7.0	20-Φ79	1775	889	17.5	R101	1753
750	30	712	1780	1230	1086	857	149	7.0	20-Φ79	1802	946	17.5	R102	1780
800	32	760	1850	1315	1155.7	914	159	7.0	20-Φ86	1872	1003	17.5	R103	1850
850	34	808	1900	1395	1225.6	965	165	7.0	20-Φ92	1929	1067	20.6	R104	1900
900	36	855	2050	1460	1289	1022	171.5	7.0	20-Φ92	2079	1124	20.6	R105	2050

ANSI Class 1500
3750psi

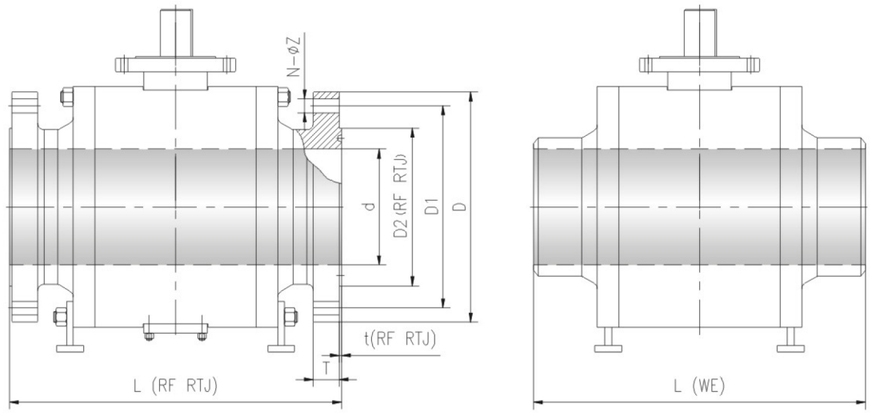

公称尺寸 Nominal Size		凸 面 连 接 (RF)								环 连 接 (RTJ)				对焊连接 (BW)
DN	NPS	d	L(RF)	D	D1	D2(RF)	T	t(RF)	N-ΦZ	L(RTJ)	D2(RTJ)	t(RTJ)	R	L(WE)
25	1	25	254	150	101.6	51	29	7.0	4-Φ25.5	254	71.5	6.4	R16	254
32	1 1/4	32	279	160	111	64	29	7.0	4-Φ25.5	279	81	6.4	R18	279
40	1 1/2	38	305	180	123.8	73	32	7.0	4-Φ28.5	305	92	6.4	R20	305
50	2	49	368	215	165	92	38.5	7.0	8-Φ25.5	371	124	7.9	R24	368
65	2 1/2	62	419	245	190.5	105	41.5	7.0	8-Φ28.5	422	137	7.9	R27	419
80	3	74	470	265	203.2	127	48	7.0	8-Φ32	473	168	7.9	R35	470
100	4	100	456	310	241.3	157	54	7.0	8-Φ35	549	194	7.9	R39	456
150	6	144	705	395	317.5	216	83	7.0	12-Φ38	711	248	9.5	R46	705
200	8	192	832	485	393.7	270	93	7.0	12-Φ44.5	840	318	11.1	R50	832
250	10	239	991	585	482.6	324	108	7.0	12-Φ51	1000	371	11.1	R54	991
300	12	287	1130	675	571.5	381	124	7.0	16-Φ54	1146	438	14.3	R58	1130
350	14	315	1257	750	635	413	133.5	7.0	16-Φ60.5	1276	489	15.9	R63	1257
400	16	360	1384	825	704.8	470	146.5	7.0	16-Φ66.6	1407	546	17.5	R66	1384
450	18	405	1537	915	774.7	533	162	7.0	16-Φ73.2	1559	613	17.5	R71	1537
500	20	455	1664	985	831.8	584	178	7.0	16-Φ79.3	1686	673	17.5	R75	1664
600	24	530	2040	1170	990.6	692	203.5	7.0	16-Φ92	2071	794	20.6	R79	2040

ANSI Class 2500
6000 psi

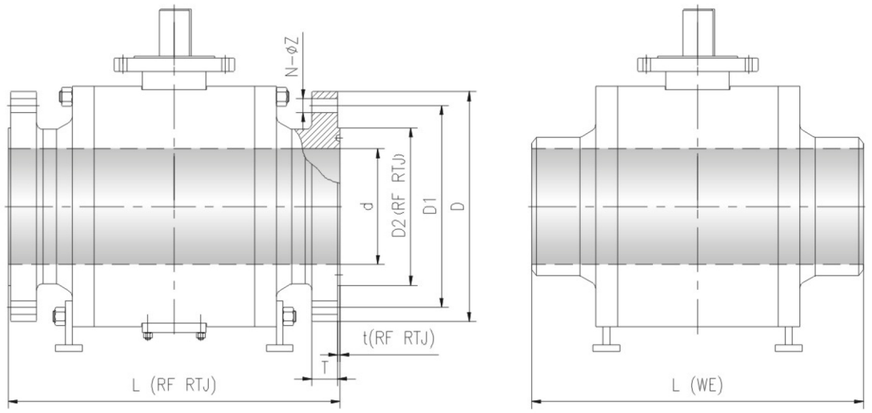

公称尺寸 Nominal Size		凸 面 连 接 (RF)								环 连 接 (RTJ)				对焊连接 (BW)
DN	NPS	d	L(RF)	D	D1	D2(RF)	T	t(RF)	N-ΦZ	L(RTJ)	D2(RTJ)	t(RTJ)	R	L(WE)
25	1	25	308	160	107.9	51	35	7.0	4-Φ25.5	308	82.5	6.4	R18	308
32	1 1/4	32	349	185	130.2	64	38.5	7.0	4-Φ28.5	352	102	7.9	R21	349
40	1 1/2	38	384	205	146	73	44.5	7.0	4-Φ32	387	114	7.9	R23	384
50	2	42	451	235	171.4	92	51	7.0	8-Φ28.5	454	133	7.9	R26	451
65	2 1/2	52	508	265	196.8	105	57.5	7.0	8-Φ32	540	149	9.5	R28	508
80	3	62	578	305	228.6	127	67	7.0	8-Φ35	584	168	9.5	R32	578
100	4	87	673	355	273	157	76.5	7.0	8-Φ41.3	683	203	11.1	R38	673
150	6	131	914	485	368.3	216	108	7.0	8-Φ54	927	279	12.7	R47	914
200	8	179	1022	550	438.1	270	127	7.0	12-Φ54	1038	340	14.3	R51	1022
250	10	223	1270	675	539.7	324	165.5	7.0	12-Φ66.6	1292	425	17.5	R55	1270
300	12	265	1422	760	619.1	381	184.5	7.0	12-Φ73.2	1445	495	17.5	R60	1422

注意事项：
Remark:

在运输和储存过程中，阀门应处于全开或全关位置。
Valves should be transported and stored with the ball in the fully open or fully closed position.
在运输和储存过程中应保护阀门的法兰面或焊接端。
Flanged ends and welded ends should be protected.
当将阀门装上管线时，应去掉阀门法兰面或焊接端的保护。
End protection should be removed only when the valve is installed in the line.
阀门不应长时间放置不用。
Long-term storage should be avoided.
在阀门安装后清洗管道。
Clean the line after fitting the valve.
管道试压后，管道内或阀门内不得残留试压介质。
Make sure no line-testing fluid is left in the line or the valve vavity.
在管道试压时，阀门的半开状态尽可能短。
During line-testing, valves should be left in the partially open position for the minimum possible amount of time.
阀门只用于开关阀，如长时间处于半开状态，将损害阀门。
The ball valve should be used for on-off service only, Use of the valve with the ball partially open would damage the valve.