Royale Valve

产品展示 / Products Show

锻钢阀门系列 / Forged Steel Valve

Z11H闸阀
Gate valves

Z11闸阀
Gate valves

法兰整体锻造闸阀
Integrally-forged-flanged gate valves

Z61W闸阀
Gate valve

Y型锻钢截止阀
Y Type forged steel globe valve

H44止回阀
Swing Check valve

H64止回阀
Swing Check valve

升降式止回阀
Lift-type check valve

延长端闸阀
Gate valves with extension end

自密封闸阀
Pressure sealing gate valve

波纹管闸阀
Bellows gate valve

调节阀
Regulation valve

自密封止回阀
Pressure sealing check valve

Y型过滤器
Y Type strainer

锻钢低温阀门
Forged steel cryogenic valve

放空导淋阀
Short lead leaching valve

法兰锻造截止阀
Forged-flanged globe valve

自密封截止阀
Pressure sealing globe valve

J61截止阀
Globe valve

Y型过滤器
Y Type strainer

锻钢球阀
Forged steel ball valve

Contens 目 录

CL150~800 承插焊和内螺纹连接闸阀/S.W(NPT)gate valve 01
CL900~1500承插焊和内螺纹连接闸阀/S.W(NPT)gate valve 02
CL900~1500自密封闸阀/P.S steel gate valve 03
CL900~1500对接焊闸阀/Butt welding gate valve 04
CL2500自密封闸阀/P.S gate valve 05
CL2500对焊闸阀/Butt Welding Gate Valve 06
CL150~600法兰闸阀/Flange gate valve 07
PN1.6~PN10.0MPa法兰闸阀/Flange gate valve 08
CL150~800承插焊和内螺纹连接截止阀/S.W (NPT) globe valve 09
CL900~1500承插焊和内螺纹连接截止阀.S.W (NPT) globe valve 10
CL900~1500自密封截止阀/P.S globe valve 11
CL900~1500对焊截止阀/Butt welding globe valve 12
CL2500自密封截止阀/P.S globe valve 13
CL150~600法兰截止阀/Flange globe valve 14
PN1.6~10.0MPa法兰截止阀/Flange globe valve 15
CL150~800承插焊和内螺纹连接止回阀/S.W (NPT) check valve 16
CL900~1500承插焊和内螺纹连接止回阀/S.W (NPT) check valve 17
CL800承插焊和内螺纹连接旋启式止回阀/S.W (NPT) swing check valve 18
CL150~600法兰止回阀/Flange check valve 19
CL150~800承插焊(内螺纹)球形止回阀/S.W (NPT) Ball Check Valve 20
CL900~1500承插焊和内螺纹连接Y型止回阀/S.W (NPT) Y type check valve 21
CL150~800承插焊和内螺纹连接Y型过滤器/S.W (NPT) Y–strainer 22
CL800~1500承插焊和内螺纹连接Y型截止阀/S.W (NPT)Y type globe valve 23
CL150~800承插焊和内螺纹连接节流阀/S.W (NPT) throttle valve 24
CL150~600法兰节流阀/Flange throttle valve 25
CL150~800承插焊和内螺纹连接低温闸阀/S.W (NPT) cryogenic gate valve 26
CL150~600低温法兰闸阀/Flange cryogenic gate valve 27
CL150~800承插焊和内螺纹连接低温截止阀/S.W (NPT) cryogenic globe valve 28
CL150~600低温法兰截正阀/Flange cryogenic globe valve 29
CL150~800承插焊和内螺纹连接截止止回阀/S.W (NPT) globe check valve 30
CL150~600放空导淋阀/Short lead leaching valve 31
CL800放空导淋阀/Short lead leaching valve 32
CL150~800承插焊波纹管阀门/S.W Bellows valve 33
CL150~800内螺纹球阀/NPT Ball valve 34
CL1500内螺纹球阀/NPT Ball valve 35
客户须知/Client notice 36-42
主要规范和标准/Main specification and standard 43
典型锻钢阀门/Typical forged steel valve 44-45
主体材质化学成分和机械性能/Material chemical analysis and mechanical capacity 46
常用ASTM材质化学与物理特性/Commonly used ASTM material chemical and physical properties 47
温度压力等级/Temperature and pressure rating 48
备忘录/Memorandum 49

Class 150Lb~800 PN1.6~14.0MPa

承插焊(内螺纹)闸阀/S.W(NPT) Gate Valve

Royale Valve

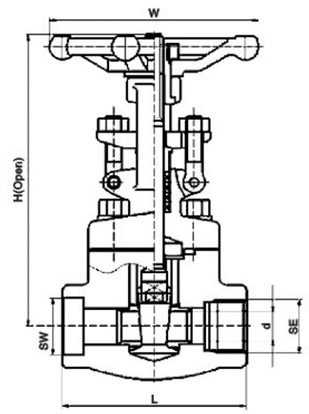

Z61H–800LB–F1"

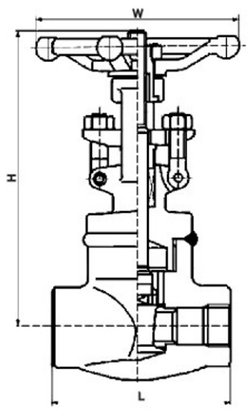

HZ61Y–800LB–1 1/2"

特征和应用规范/Features and applications

- ⊙ 全径或缩径
- ⊙ 结构：B.B或W.B;OS&Y
- ⊙ 垫片：不锈钢+柔性石墨
- ⊙ 承插焊或螺纹连接
- ⊙ 密封副材质：按“客户须知”和使用环境而定

- ⊙ Reduced or full port
- ⊙ Construction: B.B & W.B; OS&Y
- ⊙ Gasket: Stainless steel+graphite
- ⊙ Socket welding & threaded ends
- ⊙ Material for hard trim is depend on client notice & operating condition

- ⊙ 设计和制造：API 602; ANSI B16.34; JB/T 7746
- ⊙ 承插焊端：ANSI B16.11; JB/T 1751
- ⊙ 螺纹端：ANSI B1.20.1或GB 7306
- ⊙ 阀门试验和检验：API 598; JB/T 9092
- ⊙ 主体材料：A105、LF2、F5、F11、F22、F304、F304L、F316、F316L

- ⊙ Design & manufacture:API 602 & ANSI B16.34; JB/T 7746
- ⊙ Socket welding dimension: ANSI B16.11 & JB/T 1751
- ⊙ Screw end dimension: ANSI B1.20.1 & GB7306
- ⊙ Inspect and test: API 598; JB/T 9092
- ⊙ Body material: A105, LF2, F5, F11, F22, F304, F304L, F316, F316L

尺寸/Dimensions

公称通径 Norminal diameter	缩径 Reduced port	mm(in)	8(1/4)	10(3/8)	15(1/2)	20(3/4)	25(1)	32(1 1/4)	40(1 1/2)	50(2)	
	全径 Full port	mm(in)	–	–	10(3/8)	15(1/2)	20(3/4)	25(1)	32(1 1/4)	40(1 1/2)	50(2)
d		mm	7	7	10	12.7	18	23	28.5	36	43
L		mm	79	79	79	92	111	120	120	140	170
H(开 Open)		mm	150	150	150	165	190	227	240	275	332
W		mm	95	95	95	95	120	155	155	180	215

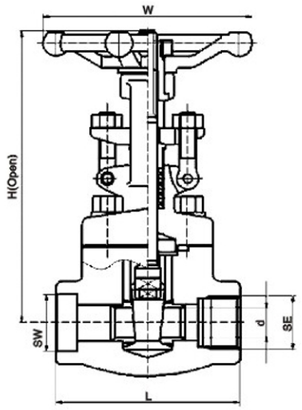

Z61H-1500LB-F1"

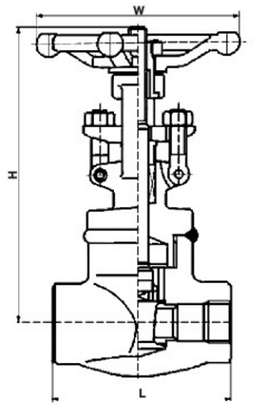

HZ11Y-900LB-1 1/2"

特征和应用规范/Features and applications

⊙ 全径
⊙ 结构：B.B或W.B;OS&Y
⊙ 垫片：不锈钢+柔性石墨
⊙ 承插焊或螺纹连接
⊙ 密封副材质：按“客户须知”和使用环境而定

⊙ 设计和制造：API 602; ANSI B16.34; JB/T 7746
⊙ 承插焊端：ANSI B16.11; JB/T 175
⊙ 螺纹端：ANSI B1.20.1; GB 7306
⊙ 阀门试验和检验：API 598; JB/T 9092
⊙ 主体材料：A105、LF2、F5、F11、F22、F304、F304L、F316、F316L

⊙ Full port
⊙ Construction: B.B & W.B; OS&Y
⊙ Gasket: Stainless steel+graphite
⊙ Socket welding & threaded ends
⊙ Material for hard trim is depend on client notice & operating condition

⊙ Design & manufacture:API 602; ANSI B16.34; JB/T 7746
⊙ Socket welding dimension: ANSI B16.11; JB/T 175
⊙ Screw end dimension: ANSI B1.20.1; GB7306
⊙ Inspect and test: API 598; JB/T 9092
⊙ Body material: A105, LF2, F5, F11, F22, F304, F304L, F316, F316L

尺寸/Dimensions

公称通径 Norminal diameter	mm(in)	10(3/8)	15(1/2)	20(3/4)	25(1)	32(1 1/4)	40(1 1/2)	50(2)
d(R.P)	mm	8	10	13	18	23	28	36
L	mm	79	92	111	120	120	140	170
H(开 Open)	mm	150	165	190	227	240	275	334
W	mm	95	95	120	155	155	180	215

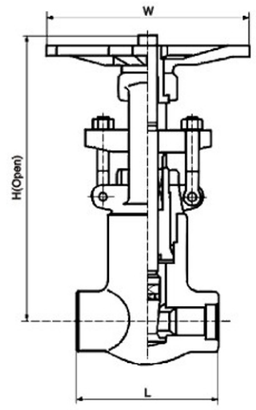

PZ61Y-160-DN25

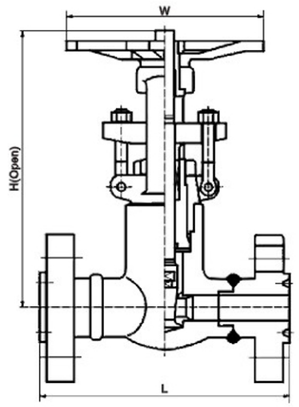

PZ41Y-900LB-3/4"

特征和应用规范/Features and applications

⊙ 结构：P.S；OS&Y
⊙ 承插焊；螺纹；法兰连接
⊙ 全径
⊙ 可更换阀座
⊙ 设计和制造：API 602; ANSI B16.34; JB/T 7746
⊙ 结构长度：ANSI B16.10；JB/T97

⊙ 承插焊：ANSI B16.11; JB/T1751
⊙ 法兰尺寸：ANSI B16.5; JB/T82.1 ~ 82.4; HG/T20592
⊙ 螺纹端尺寸：ANSI B1.20.1(NPT); GB/T7306
⊙ 检验和试验：API 598; JB/T 9092
⊙ 主体材料：A105、LF2、F5、F11、F22、F304、F304L、F316、F316L

⊙ Construction: P.S; OS & Y
⊙ Socket welding; Screw; Flange
⊙ Full port
⊙ Replaceable hard-faced seats
⊙ Design & manufacfure: API 602; ANSI B16.34 JB/T 7746
⊙ Face to face: ANSI B16.10; JB/T 97

⊙ Socket welding dimension: ANSI B16.11; JB/T 1751
⊙ Flange dimension: ANSI B16.5; JB/T 82.1~82.4; HG/T 20592
⊙ Screw end dimension: ANSI B1.20.1(NPT); GB/T 7306
⊙ Inspect and test: API 598; JB/T 9092
⊙ Body material: A105, LF2, F5, F11, F22, F304, F304L, F316, F316L

尺寸/Dimensions

公称通径 Norminal diameter		mm(in)	15(1/2)	20(3/4)	25(1)	32(1 1/4)	40(1 1/2)	50(2)
d		mm	13	13	18	23	28	36
L	SW(NPT)	mm	140	140	140	178	178	216
	RTJ	mm	216	229	254	279	305	371.2
H(开 Open)		mm	321	321	321	380	414	502
W	SW(NPT)	mm	120	120	160	160	180	200
	RTJ	mm	160	180	200	200	250	280

CL900~1500 PN16.0~25.0MPa

对接焊闸阀/Butt Welding Gate Valve

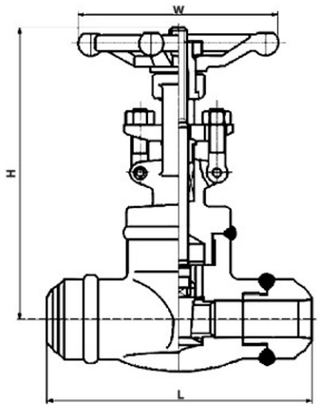

HZ51Y-160-DN40

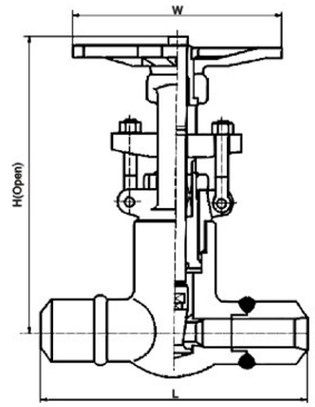

PZ51W-1500LBP-1

特征和应用规范/Features and applications

- ⊙ 结构：P.S或W.B; OS & Y
- ⊙ 缩径
- ⊙ 可更换阀座
- ⊙ 对焊连接
- ⊙ 结构长度：ANSI B16.1 0

- ⊙ 设计和制造：API 602 & ANSI B16.34; JB/T 7746
- ⊙ 对焊端尺寸：ANSI B16.25或GB/T12224
- ⊙ 检验和试验：API 598或JB/T9092
- ⊙ 主体材质：A105、LF2、F5、F11、F22、F304、F304L、F316、F316L等

- ⊙ Construction: P.S & W.B; OS&Y
- ⊙ Reduced port
- ⊙ Replaceable hard-faced seats
- ⊙ Butt welding
- ⊙ Face to face: ANSI B16.10

- ⊙ Design & manufacture: API 602 & ANSI B16.34; JB/T 7746
- ⊙ Butt welding ends dimension: ANSI B16.25 & GB/T 12224
- ⊙ Inspect and test: API 598 & JB/T9092
- ⊙ Body material: A105, LF2, F5, F11, F22, F304, F304L, F316, F316L

尺寸/Dimensions

公称通径 Norminal diameter		mm(in)	15(1/2)	20(3/4)	25(1)	32(1 1/4)	40(1 1/2)	50(2)
d		mm	13	13	18	23	28	36
L		mm	140	140	140	178	178	228
H(开 Open)	P.S	mm	321	321	321	380	414	495
	W.B	mm	297	297	297	343	380	456
W		mm	160	160	180	200	250	280

CL2500 PN42.0MPa

自密封闸阀/P.S Gate Valve

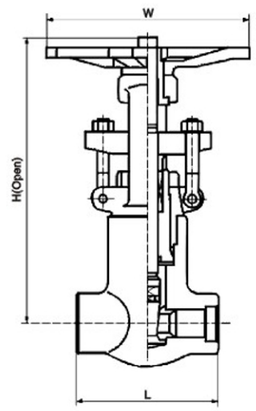

PZ61Y-420-DN15

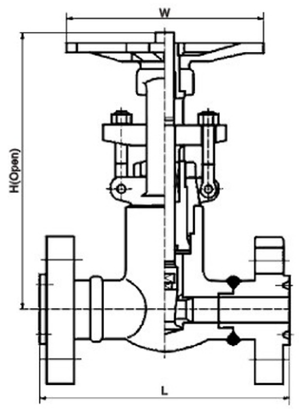

PZ41Y-2500LB-3/4"

特征和应用规范/Features and applications

- ⊙ 结构：P.S; OS & Y
- ⊙ 承插焊; 螺纹; 法兰连接
- ⊙ 可更换阀座
- ⊙ 设计和制造：ANSI B16.34
- ⊙ 结构长度：ANSI B16.10; JB/T 97

- ⊙ 法兰尺寸：ANSI B16.5; JB/T82.1 ~ 82.4; HG/T20592
- ⊙ 承插焊尺寸：ANSI B16.11; JB/T1751
- ⊙ 螺纹：ANSI B1.20.1(NPT); GB/T 7306(Rc)
- ⊙ 检验和试验：API 598
- ⊙ 主体材质：A105、LF2、F5、F11、F22、F304、F304L、F316、F316L等

- ⊙ Construction: P.S; OS&Y
- ⊙ Socket welding; Screw end; Flange
- ⊙ Replaceable hard-faced seats
- ⊙ Design & manufacture: ANSI B16.34
- ⊙ Face to face: ANSI B16.10; JB/T 97

- ⊙ Flange dimension: ANSI B16.5; JB/T82.1 ~ 82.4; HG/T20592
- ⊙ Socket welding dimension: ANSI B16.1 1; JB/T 1751
- ⊙ Screw end dimension: ANSI B1.20.1(NPT); GB/T 7306(Rc)
- ⊙ Inspect and test: API 598
- ⊙ Body material: A105, LF2, F5, F11, F22, F304, F304L, F316, F316L

尺寸/Dimensions

公称通径 Norminal diameter		mm(in)	15(1/2)	20(3/4)	25(1)	32(1 1/4)	40(1 1/2)	50(2)
d		mm	11	14	19	25	28	36
L	SW(NPT)	mm	186	186	186	178	220	279
	RTJ	mm	264	273	308	352.2	387.2	454.2
H(开 Open)		mm	321	321	321	375	406	496
W	SW(NPT)	mm	120	120	160	160	180	200
	RTJ	mm	160	160	180	200	250	280

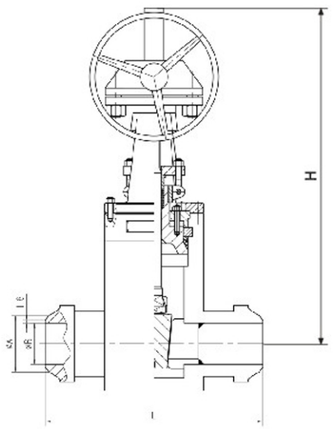

PZ551Y-2500LB-6"

特征和应用规范/Features and applications

- ⊙ 结构：P.S或W.B；OS＆Y
- ⊙ 对焊连接
- ⊙ 缩径
- ⊙ 设计和制造：API 602 & ANSI B16.34
- ⊙ 结构长度：ANSI B16.10
- ⊙ 对焊端尺寸：ANSI B16.25
- ⊙ 检验和试验：API 598
- ⊙ 主体材质：A105、LF2、F5、F1 1、F22、F304、F304L、F31 6、F316L等

- ⊙ Construction: P.S & W.B; OS & Y
- ⊙ Butt welding
- ⊙ Reduced port
- ⊙ Design & manufacture: API 602 & ANSI B16.34
- ⊙ Face to face: ANSI B16.10
- ⊙ Welding end dimension: ANSI B16.25
- ⊙ Inspect and test: API 598
- ⊙ Body material: A105, LF2, F5, F11, F22, F304, F304L, F316, F316L

尺寸/Dimensions

公称通径 Norminal diameter	mm(in)	150(6)
d(R.P)	mm	111
L	mm	610
H	mm	945
W	mm	725

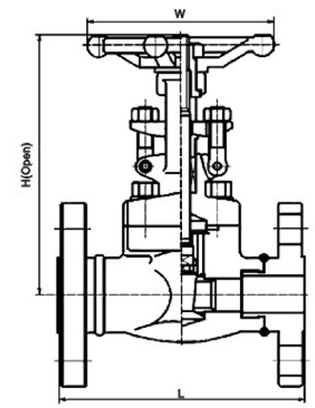

Z41H-300LB-1"

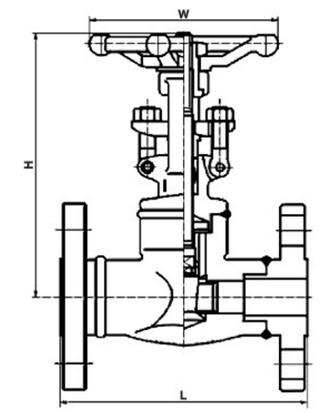

HZ41Y-150LB-1 1/2"

特征和应用规范/Features and applications

- ⊙ 结构：B.B或W.B; OS＆Y
- ⊙ 垫片：不锈钢+柔性石墨
- ⊙ 法兰连接
- ⊙ 可更换阀座
- ⊙ 设计和制造：API 602；ANSI B16.34
- ⊙ 法兰尺寸：ANSI B16.5
- ⊙ 结构长度：ANSI B16.10
- ⊙ 检验和试验：API 598
- ⊙ 主体材质：A105、LF2、F5、F1 1、F22、F304、F304L、F316、F316L等

- ⊙ Construction: B.B & W.B; OS & Y
- ⊙ Gasket: Stainless steel+graphite
- ⊙ Flange
- ⊙ Replaceable hard-faced seats
- ⊙ Design & manufacture: API 602; ANSI B16.34
- ⊙ Flange dimension：ANSI B16.5
- ⊙ Face to face：ANSI B16.10
- ⊙ Inspect and test：API 598
- ⊙ Body material：A105, LF2, F5, F11, F22, F304, F304L, F316, F316L

尺寸/Dimensions

公称通径 Norminal diameter		mm(in)	15(1/2)	20(3/4)	25(1)	32(1 1/4)	40(1 1/2)	50(2)
d		mm	10	13	18	23	28	36
L	CL150	mm	108	117	127	140	165	178
	CL300	mm	140	152	165	178	190	216
	CL600	mm	165	190	216	229	241	292
H	CL150	mm	133	150	184	218	246	283
	CL300-600	mm	166	169	193	230	246	283
W		mm	100	100	120	160	160	180

说明Note：CLASS≤600，一般法兰密封形式为“RF”，如果是其它形式要注明；美标“RJ”的结构长度比“RF”的结构长度长“X”。
Sealing type usually is Raised Face when pressure is not exceed class 600LB. PIs mark your requirements if the type is different, Face to face dimension of "RJ" in API standard is "X" longer than the one of "RF".

PN1.6~10.0MPa

法兰闸阀/Flange Gate Valve

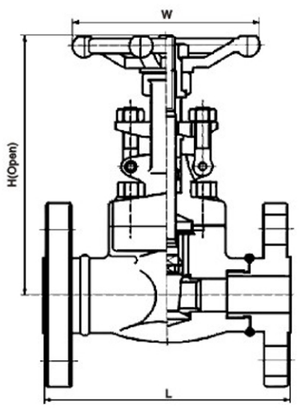

Z41H-16C-DN20

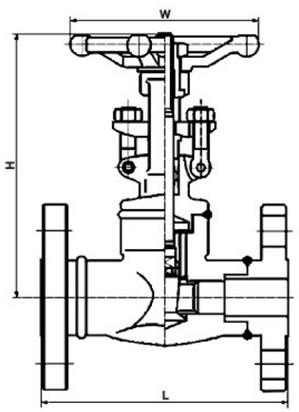

HZ41Y-100-DN25

特征和应用规范/Features and applications

- ⊙ 结构：B.B或W.B；OS＆Y
- ⊙ 垫片：不锈钢+柔性石墨
- ⊙ 法兰连接
- ⊙ 可更换阀座
- ⊙ 设计和制造：GB/T12224; JB/T7746

- ⊙ 法兰尺寸：J B/T82.1 ~ 82.4; JB/T 79
- ⊙ 结构长度：JB/T 97
- ⊙ 检验和试验：API 598; JB/T 9092
- ⊙ 主体材质：A105、LF2、F5、F11、F22、F304、F304L、F316、F316L等

- ⊙ Construction: B.B & W.B; OS & Y
- ⊙ Gasket: Stainless steel + graphite
- ⊙ Flange
- ⊙ Replaceable hard-faced seats
- ⊙ Design & manufacture: GB/T12224; JB/T7746

- ⊙ Flange dimension: JB/T82.1 ~ 82.4; JB/T 79
- ⊙ Face to face: JB/T 97
- ⊙ Inspect and test: API 598 ; JB/T 9092
- ⊙ Body material: A105, LF2, F5, F11, F22, F304, F304L, F316, F316L

尺寸/Dimensions

公称通径 Norminal diameter		mm(in)	15(1/2)	20(3/4)	25(1)	32(1 1/4)	40(1 1/2)	50(2)
d		mm	10	13	18	23	28	36
L	1.6	mm	170	190	210	230	250	250
	2.5	mm						
	4.0	mm						
	6.4	mm	130	150	160	180	200	250
	10.0	mm						
H(开 Open)		mm	166	169	193	230	246	283
W		mm	100	100	120	160	160	180

说明Note：PN4.0一般为凹面，其它要求要说明。Flange Sealing Type Usually is female when normal pressure is 4.0Mpa, Please mark your special requirements if you want other.

CL150~800 PN1.6~14.0MPa

承插焊(内螺纹)截止阀/S.W(NPT) Globe Valve

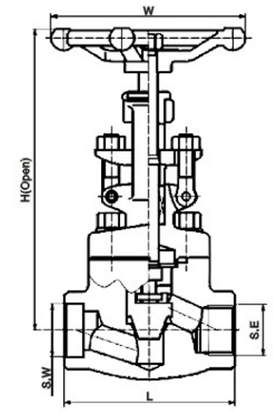

J11H-800LB-1/2"

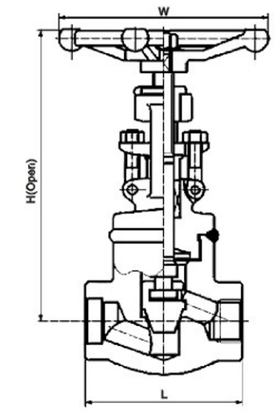

HJ11Y-600LB-1"

特征和应用规范/Features and applications

- ⊙ 全径或缩径
- ⊙ 结构：B.B或W.B；OS＆Y
- ⊙ 垫片：不锈钢+柔性石墨
- ⊙ 承插焊或螺纹连接
- ⊙ 整体阀座
- ⊙ 设计和制造：API 602 & ANSI B16.34

- ⊙ 承插焊尺寸：ANSI B16.11; JB/T 1751
- ⊙ 螺纹端尺寸：ANSI B1.20.1(NPT)；GB/T 7306(Rc)
- ⊙ 检验和试验：API 598
- ⊙ 主体材质：A105、LF2、F5、F11、F22、F304、F304L、F316、F316L等

- ⊙ Reduced or ful l port
- ⊙ Construction: B.B & W.B; OS & Y
- ⊙ Gasket: Stainless steel+graphite
- ⊙ Socket welding & threaded ends
- ⊙ Integral seat
- ⊙ Design & manufacture: API 602 & ANSI B16.34

- ⊙ Socket welding dimension: ANSI B16.11; JB/T 1751
- ⊙ Screw end dimension: ANSI B1.20.1(NPT)；GB/T 7306(Rc)
- ⊙ Inspect and test: API 598
- ⊙ Body material: A105, LF2, F5, F11, F22, F304, F304L, F316, F316L

尺寸/Dimensions

公称通径 Norminal diameter	缩径 Reduced port	mm(in)	8(1/4)	10(3/8)	15(1/2)	20(3/4)	25(1)	32(1 1/4)	40(1 1/2)	50(2)	
	全径 Full port	mm(in)	–	–	10(3/8)	15(1/2)	20(3/4)	25(1)	32(1 1/4)	40(1 1/2)	50(2)
d		mm	6	8	10	13	18	23	28	33	43
L		mm	79	79	79	92	111	120	152	172	220
H(开 Open)		mm	166	166	166	175	206	228	262	300	340
W		mm	100	100	100	100	120	160	160	180	240

CL900~1500 PN16.0~25.0MPa

承插焊(内螺纹)截止阀/S.W(NPT) Globe Valve

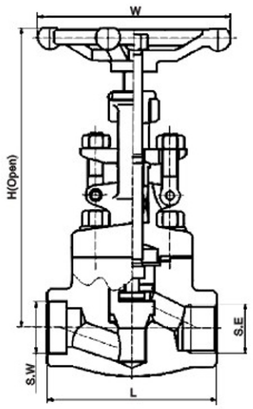

J11Y-900LB

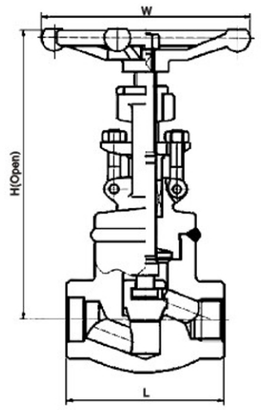

HJ11Y-1500LB

特征和应用规范/Features and applications

⊙ 结构：B.B或W.B；OS＆Y
⊙ 垫片：不锈钢+柔性石墨
⊙ 承插焊；螺纹连接
⊙ 整体阀座
⊙ 设计和制造：ANSI B16.34；API 602

⊙ 承插焊端尺寸：ANSI B16.11; JB/T1751
⊙ 螺纹端尺寸：ANSI B1.20.1(NPT)' GB/T7306(Rc)
⊙ 检验和试验：API 598
⊙ 主体材质：A105、LF2、F5、F11、F22、F304、F304L、F316、F316L等。

⊙ Construction: B.B & W.B; OS & Y
⊙ Gasket: Stainless steel+graphite
⊙ Socket welding; threaded ends
⊙ Integral seat
⊙ Design & manufacture: ANSI B16.34; API 602

⊙ Socket welding dimension: ANSI B16.11; JB/T1751
⊙ Screw end dimension: ANSI B1.20.1(NPT)' GB/T7306(Rc)
⊙ Inspect and test: API 598
⊙ Body material: A105, LF2, F5, F1 1, F22, F304, F304L, F316, F316L

尺寸/Dimensions

公称通径 Norminal diameter	mm(in)	8(1/4)	10(3/8)	15(1/2)	20(3/4)	25(1)	32(1 1/4)	40(1 1/2)	50(2)
d	mm	6	8	10	13	18	23	28	33
L	mm	79	79	92	111	120	152	172	220
H(开 Open)	mm	166	166	170	193	230	246	283	325
W	mm	100	100	100	120	160	160	180	200

CL 900~1500 PN16.0~25.0MPa

自密封截止阀/P.S Globe Valve

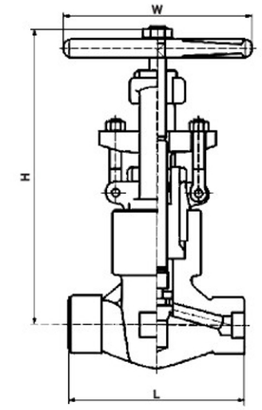

PJ61Y-1500LB

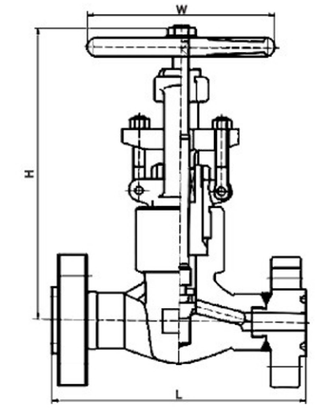

PJ41Y-900LB

特征和应用规范/Features and applications

⊙ 结构：P.S；OS＆Y
⊙ 承插焊；内螺纹；法兰连接
⊙ 整体阀座
⊙ 设计和制造：API 602; ANSI B16.34
GB/T12224;JB/T 7746
⊙ 结构长度：ANSI B16.10; JB/T96

⊙ 法兰端尺寸：ANSI B16.5; JB/T82.1–82.4
⊙ 承插焊端尺寸：ANSI B16.11; JB/T 1751
⊙ 螺纹端尺寸：ANSI B1.20.1(NPT) GB/T 7306(Rc)
⊙ 检验和试验：API 598
⊙ 主体材质：A105、LF2、F5、F11、F22、F304、F316、F304L、F316L等

⊙ Construction: P.S; OS & Y
⊙ Socket welding: Female thread; Flange
⊙ Integral seat
⊙ Design & manufacture: API 602; ANSI B16.34
GB/T 12224; JB/T 7746
⊙ Face to face: ANSI B16.10; JB/T96

⊙ Flange dimension: ANSI B16.5; JB/T82.1–82.4
⊙ Socket welding dimension: ANSI B16.11; JB/T1751
⊙ Screw end dimension: ANSI B1.20.1(NPT) GB/T7306(Rc)
⊙ Inspect and test: API 598.
⊙ Body material: A105, LF2, F5, F11, F22, F304, F316, F304L, F316L

尺寸/Dimensions

公称通径 Norminal diameter		mm(in)	15(1/2)	20(3/4)	25(1)	32(1 1/4)	40(1 1/2)	50(2)
d		mm	11	13	18	23	28	33
L	SW(NPT)	mm	140	140	140	178	178	228
	RTJ	mm	216	229	254	279	305	371.2
H(开 Open)		mm	321	207	240	258	290	337
W	SW(NPT)	mm	120	120	160	160	180	200
	RTJ	mm	160	160	180	200	250	280

CL900~1500 PN16.0~25.0MPa

对焊截止阀/Butt Welding Globe Valve

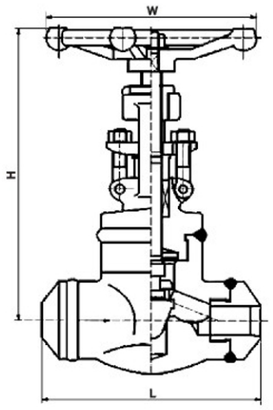

HJ51Y-900LB

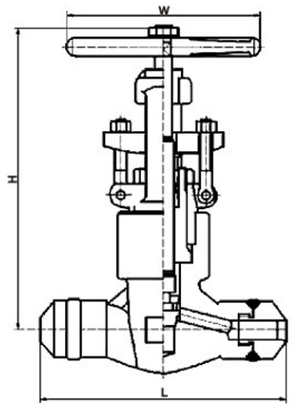

PJ51Y-1500LB

特征和应用规范/Features and applications

⊙ 结构：P.S或W.B；OS＆Y
⊙ 对焊连接
⊙ 缩径
⊙ 整体阀座
⊙ 设计和制造：API 602 & ANSI B16.34

⊙ 结构长度：ANSI B16.10
⊙ 对焊端尺寸：ANSI B16.25
⊙ 检验和试验：API 598
⊙ 主体材质：A105、LF2、F5、F1 1、F22、F304、F304L、F31 6、F316L等

⊙ Construction: P.S & W.B; OS & Y
⊙ Butt welding
⊙ Reduced port
⊙ Integral seat
⊙ Design & manufacture: API 602 & ANSI B16.34

⊙ Face to face: ANSI B16.10
⊙ Welding end dimension: ANSI B16.25
⊙ Inspect and test: API 598
⊙ Body material: A105, LF2, F5, F11, F22, F304, F304L, F316, F316L

尺寸/Dimensions

公称通径 Norminal diameter		mm(in)	15(1/2)	20(3/4)	25(1)	32(1 1/4)	40(1 1/2)	50(2)
d(R.P)		mm	11	13	18	23	28	33
L		mm	140	140	140	178	178	228
H(开 Open)	P.S	mm	318	318	318	398	408	524
	W.B	mm	207	240	258	290	337	354
W		mm	160	160	180	200	250	280

CL2500 PN42.0MPa

自密封截止阀/P.S Globe Valve

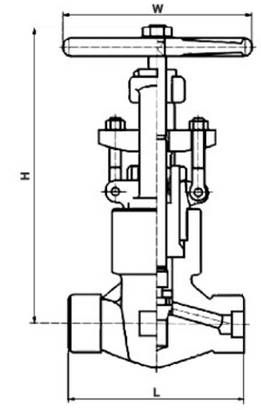

PJ61Y-420-DN15

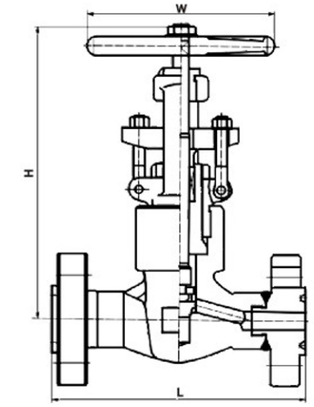

PJ41Y-2500LB-1"

特征和应用规范/Features and applications

⊙ 结构：P.S；OS＆Y
⊙ 垫片：不锈钢+柔性石墨
⊙ 整体阀座
⊙ 设计和制造：ANSI B16.34
⊙ 结构长度：ANSI B16.10；JB/T96
⊙ 法兰端尺寸：ANSI B16.5

⊙ 承插焊端尺寸：ANSI B16.11; JB/T1751
⊙ 螺纹端尺寸：ANSI B1.20.1(NPT)
GB/T 7306(Rc)
⊙ 检验和试验：API 598
⊙ 主体材质：A105、LF2、F5、F11、F22、F304、F304L、F316、F316L等

⊙ Construction: P.S; OS & Y
⊙ Gasket: Stainless steel+graphite
⊙ Integral seat
⊙ Design & manufacture: ANSI B16.34
⊙ Face to face: ANSI B16.10; JB/T96
⊙ Flange dimension: ANSI B16.5

⊙ Socket welding dimension：ANSI B16.11; JB/T 1751
⊙ Screw end dimension：ANSI B1.20.1(NPT); GB/T7306(Rc)
⊙ Inspect and test：API 598
⊙ Body material：A105, LF2, F5, F11, F22, F304, F304L, F316, F316L

尺寸/Dimensions

公称通径 Norminal diameter		mm(in)	15(1/2)	20(3/4)	25(1)	32(1 1/4)	40(1 1/2)	50(2)
d		mm	11	14	18	25	28	35
L	SW(NPT)	mm	186	186	186	178	228	279
	RTJ	mm	264	273	308	352.2	387.2	454.2
H(开 Open)		mm	333	333	333	410	420	524
W	SW(NPT)	mm	120	120	160	160	180	200
	RTJ	mm	160	160	180	200	250	280

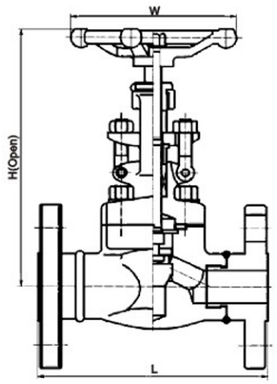

J41H-150LB-1"

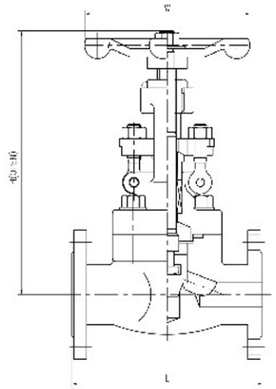

J41Y-300LB-3/4"

特征和应用规范/Features and applications

- ⊙ 结构：B.B或W.B；OS＆Y
- ⊙ 垫片：不锈钢+柔性石墨
- ⊙ 法兰连接
- ⊙ 整体阀座
- ⊙ 设计和制造：API 602 & ANSI B16.34
- ⊙ 法兰尺寸：ANSI B16.5
- ⊙ 结构长度：ANSI B16.10
- ⊙ 检验和试验：API 598
- ⊙ 主体材质：A105、LF2、F5、F11、F22、F304、F304L、F316、F316L

- ⊙ Construction: B.B & W.B; OS & Y
- ⊙ Gasket: Stainless steel+graphite
- ⊙ Flange
- ⊙ Integral seat
- ⊙ Design & manufacture: API 602 & ANSI B16.34
- ⊙ Flange dimension: ANSI B16.5
- ⊙ Face to face: ANSI B16.10
- ⊙ Inspect and test: API 598
- ⊙ Body material: A105, LF2, F5, F11, F22, F304, F304L, F316, F316L

尺寸/Dimensions

公称通径 Norminal diameter		mm(in)	15(1/2)	20(3/4)	25(1)	32(1 1/4)	40(1 1/2)	50(2)
d		mm	10	13	18	23	28	33
L	CL150	mm	108	117	127	140	165	203
	CL300	mm	152	178	203	216	229	267
	CL600	mm	165	190	216	229	241	292
H	CL150	mm	140	154	184	216	232	260
	CL300-600	mm	166	175	206	228	262	300
W		mm	100	100	120	160	160	180

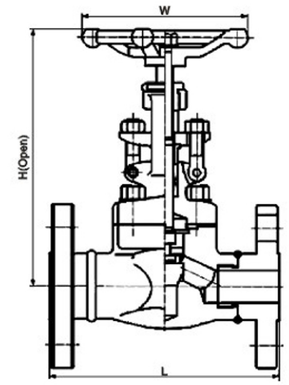

J41H-16C-DN25

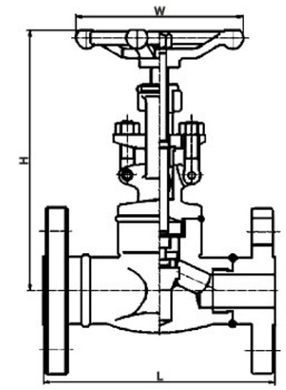

HJ41Y-25-DN20

特征和应用规范/Features and applications

- ⊙ 结构：B.B或W.B; OS＆Y
- ⊙ 垫片：不锈钢+柔性石墨
- ⊙ 法兰连接
- ⊙ 整体阀座
- ⊙ 设计和制造：GB/T12224; JB/T7746
- ⊙ 法兰尺寸：JB/T82.1-82.4; JB/T 79
- ⊙ 结构长度：JB/T96-95
- ⊙ 检验和试验：API 598; JB/T 9092
- ⊙ 主体材质：A105、LF2、F5、F11、F22、F304、F304L、F316、F316L

- ⊙ Construction: B.B & W.B; OS & Y
- ⊙ Gasket: Stainless steel+graphite
- ⊙ Flange
- ⊙ Integral seat
- ⊙ Design & manufacture: GB/T12224; JB/T7746
- ⊙ Flange dimension: JB/T82.1-82.4; JB/T 79
- ⊙ Face to face: JB/T96-95
- ⊙ Inspect and test: API 598; JB/T 9092
- ⊙ Body material: A105, LF2, F5, F11, F22, F304, F304L, F316, F316L

尺寸/Dimensions

公称通径 Norminal diameter		mm(in)	15(1/2)	20(3/4)	25(1)	32(1 1/4)	40(1 1/2)	50(2)
d		mm	10	13	18	23	28	33
L	1.6, 2.5, 4.0	mm	130	150	160	190	200	230
	6.4, 10.0	mm	170	190	210	230	260	300
H		mm	190	195	230	245	262	300
W		mm	100	100	120	160	160	180

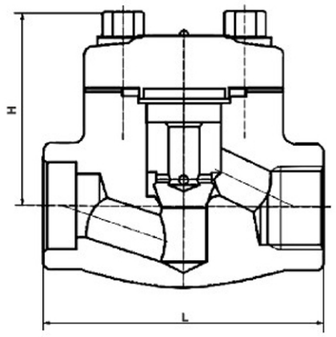

H11H-150LB-3/4"

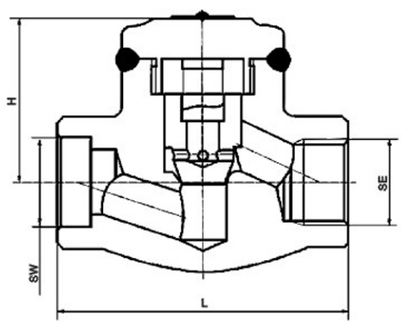

HH11Y-16C-DN25

特征和应用规范/Features and applications

⊙ 缩径或全径
⊙ 结构：B.C或W.C；升降式止回阀
⊙ 垫片：不锈钢+柔性石墨
⊙ 承插焊或螺纹连
⊙ 整体阀座
⊙ 承插端尺寸：ANSI B16.11；JB/T1751

⊙ 螺纹端：ANSI B1.20.1(NPT); GB/T 7306(Rc)
⊙ 设计和制造：API 602; ANSI B16.34; API 600
GB/T12224; JB/T7746
⊙ 检验和试验：API 598; JB/T9092
⊙ 主体材质：A105、LF2、F5、F11、F22、F304、F304L、F316、F316L

⊙ Reduced or full port
⊙ Construction: B.C & W.C; lift check valve
⊙ Gasket: stainless steel+ graphite
⊙ Socket welding & threaded ends
⊙ Integral seat
⊙ Socket welding dimension: ANSI B16.11; JB/T1751

⊙ Screw end dimension: ANSI B1.20.1(NPT)
GB/T 7306(Rc)
⊙ Design & manufacture: API 602; ANSI B16.34; API 600
GB/T12224; JB/T7746
⊙ Inspect and test: API 598; JB/T9092
⊙ Body material: A105, LF2, F5, F11, F22, F304, F304L, F316, F316L

尺寸/Dimensions

公称通径 Norminal diameter	缩径 Reduced port	mm(in)	8(1/4)	10(3/8)	15(1/2)	20(3/4)	25(1)	32(1 1/4)	40(1 1/2)	50(2)	
	全径 Full port	mm(in)	–	–	10(3/8)	15(1/2)	20(3/4)	25(1)	32(1 1/4)	40(1 1/2)	50(2)
d		mm	6	8	10	13	18	23	28	33	42
L		mm	79	79	79	92	111	120	152	172	200
H		mm	62	62	62	63	78	82	102	120	147

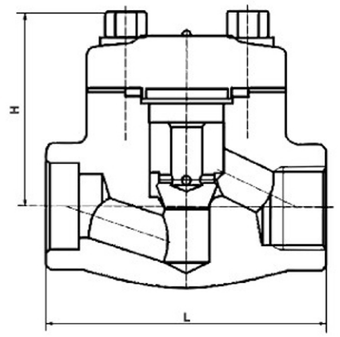

H11Y-1500LB-1"

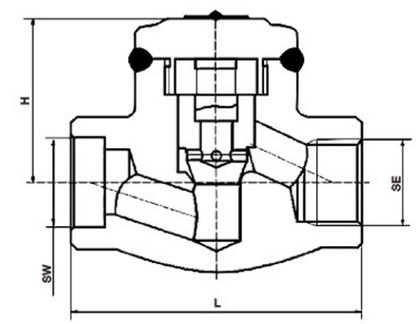

HH61H-160-DN20

特征和应用规范/Features and applications

⊙ 结构：B.C或W.C；升降式止回阀
⊙ 垫片：不锈钢+柔性石墨
⊙ 承插焊或螺纹连接
⊙ 整体阀座
⊙ 承插焊尺寸：ANSI B16.11；JB/T1751

⊙ 螺纹尺寸：ANSI B1.20.1; GB/T7306
⊙ 设计和制造：ANSI B16.34; API 602
GB/T12224; JB/T7746
⊙ 检验和试验：API 598; JB/T 9092
⊙ 主体材质：A105、LF2、F5、F11、F22、F304、F304L、F316、F316L

⊙ Construction: B.C or W.C; lift check valve
⊙ Gasket: Stainless steel+graphite
⊙ Socket welding & threaded ends
⊙ Integral seat
⊙ Socket welding dimension: ANSI B16.11; JB/T1751

⊙ Screw end dimension：ANSI B1.20.1; GB/T 7306
⊙ Design & manufacture：ANSI B16.34; API 602
GB/T12224; JB/T7746
⊙ Inspect and test：API 598; JB/T 9092
⊙ Body material：A105, LF2, F5, F11, F22, F304, F304L, F316, F316L

尺寸/Dimensions

公称通径 Norminal diameter	mm(in)	15(1/2)	20(3/4)	25(1)	32(1 1/4)	40(1 1/2)	50(2)
d	mm	10	13	18	23	28	33
L	mm	92	111	120	152	172	200
H	mm	63	98	104	120	140	158

CL800 PN14.0

承插焊(内螺纹)旋启止回阀/S.W (NPT) Wing Check Valve

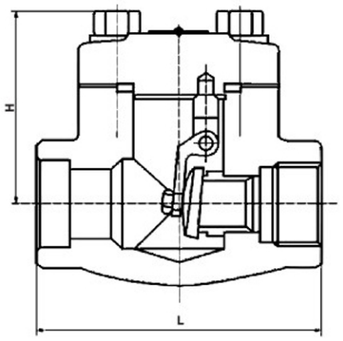

H64H–800LB–1"

特征和应用规范/Features and applications

- ⊙ 缩径或全径
- ⊙ 结构：B.C旋启止回阀
- ⊙ 垫片：不锈钢+柔性石墨
- ⊙ 承插焊或螺纹连接
- ⊙ 可更换阀座
- ⊙ 承插焊尺寸：ANSI B16.11; JB/T1751
- ⊙ 螺纹尺寸：ANSI B1.20.1; GB/T7306
- ⊙ 设计和制造：API 602; ANSI B16.34 GB/T12224; JB/T7746
- ⊙ 检验和试验：API 598; JB/T9092
- ⊙ 主体材质：A105、LF2、F5、F11、F22、F304、F304L、F316、F316L

- ⊙ Reduced or full port
- ⊙ Construction: B.C Swing check valve
- ⊙ Gasket: stainless steel + graphite
- ⊙ Socket welding & threaded ends
- ⊙ Replaceable hard–faced seats
- ⊙ Socket welding dimension: ANSI B16.11; JB/T1751
- ⊙ Screw end dimension: ANSI B1.20.1; GB/T7306
- ⊙ Design & manufacture: API 602; ANSI B16.34 GB/T12224; JB/T7746
- ⊙ Inspect and test: API 598; JB/T9092
- ⊙ Body material: A105, LF2, F5, F11, F22, F304, F304L, F316, F316L

尺寸/Dimensions

公称通径 Norminal diameter	缩径 Reduced port	mm(in)	15(1/2)	20(3/4)	25(1)	32(1 1/4)	40(1 1/2)	50(2)	
	全径 Full port	mm(in)	10(3/8)	15(1/2)	20(3/4)	25(1)	32(1 1/4)	40(1 1/2)	50(2)
d		mm	10	13	18	23	28	36	42
L		mm	79	92	111	120	120	140	170
H		mm	62	63	78	82	1102	120	140

CL150~600

法兰止回阀/Flange Check Valve

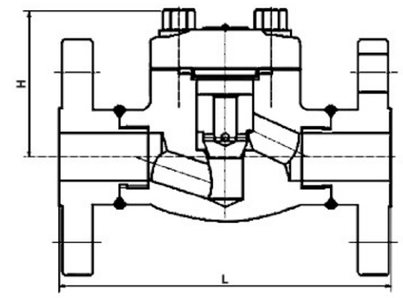

H41Y–300LB–3/4"

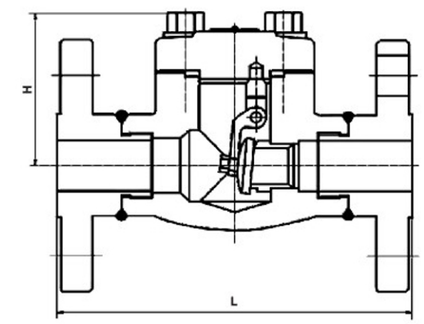

H44H–150LB–1"

特征和应用规范/Features and applications

- ⊙ 缩径或全径
- ⊙ 结构：B.C升降式或旋启式止回阀
- ⊙ 垫片：不锈钢+柔性石墨
- ⊙ 设计和制造：API 602；ANSI B16.34；
- ⊙ 法兰端尺寸：ANSI B16.5
- ⊙ 结构长度：ANSI B16.10
- ⊙ 检验和试验：API 598
- ⊙ 主体材质：A105、LF2、F5、F11、F22、F304、F304L、F316、F316L等

- ⊙ Reduced or full port
- ⊙ Construction: B.C lift check valve & swing check valve
- ⊙ Gasket: Stainless steel+graphite
- ⊙ Design & manufacture: API 602; ANSI B16.34;
- ⊙ Flange dimension：ANSI B16.5
- ⊙ Face to face：ANSI B16.10
- ⊙ Inspect and test：API 598
- ⊙ Body material：A105, LF2, F5, F11, F22, F304, F304L, F316, F31 6L

尺寸/Dimensions

公称通径 Norminal diameter		mm(in)	15(1/2)	20(3/4)	25(1)	32(1 1/4)	40(1 1/2)	50(2)
L	CL150(L.S)	mm	108	117	127	140	165	203
	CL300(L)	mm	152	178	203	216	229	267
	CL300(S)	mm	152	178	216	229	241	267
	CL600(L.S)	mm	165	190	216	229	241	292
H		mm	62	63	78	82	102	120

CL150~800 PN1.6~14.0MPa

承插焊(内螺纹)球形止回阀/S.W (NPT) Ball Check Valve

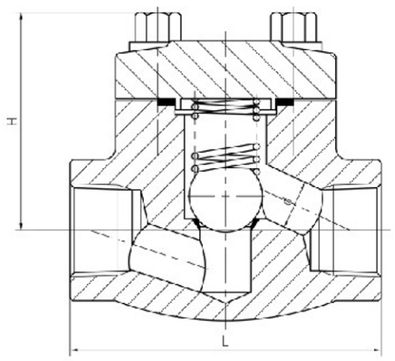

H11H-800LB-DN15-DN65

特征和应用规范/Features and applications

- ⊙ 缩径或全径
- ⊙ 结构：B.C或W.C；升降式止回阀
- ⊙ 垫片：不锈钢+柔性石墨
- ⊙ 承插焊或螺纹连
- ⊙ 整体阀座
- ⊙ 承插端尺寸：ANSI B16.11；JB/T1751
- ⊙ 螺纹端：ANSI B1.20.1(NPT); GB/T 7306(Rc)
- ⊙ 设计和制造：API 602; ANSI B16.34; API 600 GB/T12224; JB/T7746
- ⊙ 检验和试验：API 598; JB/T9092
- ⊙ 主体材质：A105、LF2、F5、F11、F22、F304、F304L、F316、F316L

- ⊙ Reduced or full port
- ⊙ Construction: B.C & W.C; lift check valve
- ⊙ Gasket: stainless steel+ graphite
- ⊙ Socket welding & threaded ends
- ⊙ Integral seat
- ⊙ Socket welding dimension: ANSI B16.11; JB/T1751
- ⊙ Screw end dimension: ANSI B1.20.1(NPT) GB/T 7306(Rc)
- ⊙ Design & manufacture: API 602; ANSI B16.34; API 600 GB/T12224; JB/T7746
- ⊙ Inspect and test: API 598; JB/T9092
- ⊙ Body material: A105, LF2, F5, F11, F22, F304, F304L, F316, F316L

尺寸/Dimensions

公称通径 Norminal diameter	缩径 Reduced port	mm(in)	8(1/4)	10(3/8)	15(1/2)	20(3/4)	25(1)	32(1 1/4)	40(1 1/2)	50(2)
	全径 Full port	mm(in)	–	–	10(3/8)	15(1/2)	20(3/4)	25(1)	32(1 1/4)	40(1 1/2)	50(2)
d		mm	6	8	10	13	18	23	28	33	42
L		mm	79	79	79	92	111	120	152	172	200
H		mm	62	62	62	63	78	82	102	120	147

CL900~1500 PN16.0~25.0MPa

承插焊(内螺纹)Y型止回阀/S.W (NPT) Y Type Check Valve

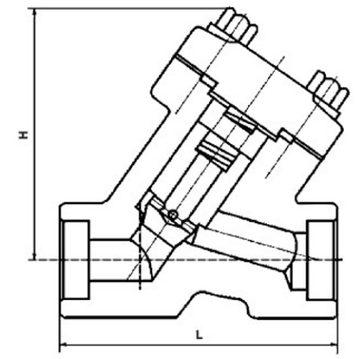

H65H-800LB-1"

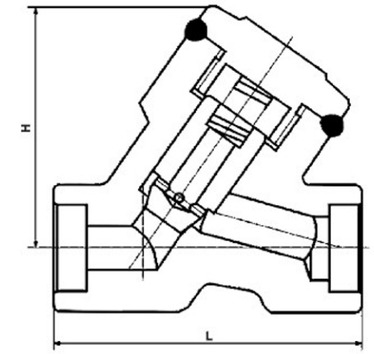

HH65Y-250-DN20

特征和应用规范/Features and applications

- ⊙ 缩径或全径
- ⊙ 结构：B.C或W.C；带弹簧活塞升降Y型
- ⊙ 垫片：不锈钢+柔性石墨
- ⊙ 承插焊或螺纹连接
- ⊙ 整体阀座
- ⊙ 承插焊尺寸：ANSI B16.11；JB/T1751
- ⊙ 螺纹尺寸：ANSI B1.20.1(NPT)；GB/T7306
- ⊙ 设计和制造：API 602；ANSI B16.34； GB/T12224；JB/T 7746
- ⊙ 检验和试验：API 598; JB/T 9092
- ⊙ 主体材质：A105、LF2、F5、F11、F22、F304、F304L、F316、F316L等

- ⊙ Reduced or full port
- ⊙ Construction: B.C & W.C; Y type lift check valve with spring & Piston
- ⊙ Gasket: Stainless steel + graphite
- ⊙ Socket welding & threaded ends
- ⊙ Integral seat
- ⊙ Socket welding dimension: ANSI B16.11; JB/T1751
- ⊙ Screw end dimension: ANSI B1.20.1(NPT)；GB/T7306
- ⊙ Design & manufacture: API 602；ANSI B16.34； GB/T12224; JB/T 7746
- ⊙ Inspect and test: API 598; JB/T 9092
- ⊙ Body material: A105, LF2, F5, F11, F22, F304, F304L, F316, F316L

尺寸/Dimensions

公称通径 Norminal diameter		mm(in)	10(3/8)	15(1/2)	20(3/4)	25(1)	32(1 1/4)	40(1 1/2)	50(2)
L	CL800	mm	98	98	98	120	140	140	170
	CL1500	mm	120	120	120	140	140	170	220
H	CL800	mm	84	84	84	102	114	115	145
	CL1500	mm	90	90	101	125	132	143	203

承插焊(内螺纹)Y型过滤器/S.W (NPT) Y – Strainer

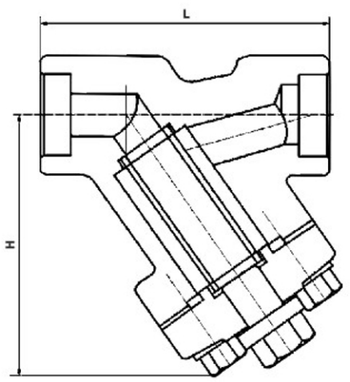

G65–800LB

特征和应用规范/Features and applications

- ⊙ 结构：B.C;Y型
- ⊙ 垫片：不锈钢+柔性石墨
- ⊙ 丝堵垫：铜片
- ⊙ 承插焊或螺纹连接
- ⊙ 承插焊尺寸：ANSI B16.11; JB/T1751
- ⊙ 螺纹尺寸：ANSI B1.20.1; GB/T 7306 (Rc)
- ⊙ 设计和制造：API 602; ANSI B16.34
- ⊙ 检验和试验：API 598
- ⊙ 主体材质：A105、LF2、F5、F11、F22、F304、F304L、F316、F316L等

- ⊙ Construction: B.C;Y Type
- ⊙ Gasket: Stainless steel+graphite
- ⊙ Screw Gasket:Copper Sheet
- ⊙ Socket welding & threaded ends
- ⊙ Socket welding dimension:ANSI B16.11; JB/T1751
- ⊙ Screw end dimension: ANSI B1.20.1; GB/T7306 (Rc)
- ⊙ Design & manufacture: API 602; ANSI B16.34
- ⊙ Inspect and test: API 598
- ⊙ Body material: A105, LF2, F5, F11, F22, F304, F304L, F316, F316L

尺寸/Dimensions

公称通径 Norminal diameter	mm(in)	15(1/2)	20(3/4)	25(1)	32(1 1/4)	40(1 1/2)	50(2)
d	mm	11	13	18	23	28	33
L	mm	98	98	120	140	140	170
H	mm	86	86	105	118	120	145

承插焊(内螺纹)Y型 截止阀/S.W (NPT) Y Type Globe Valve

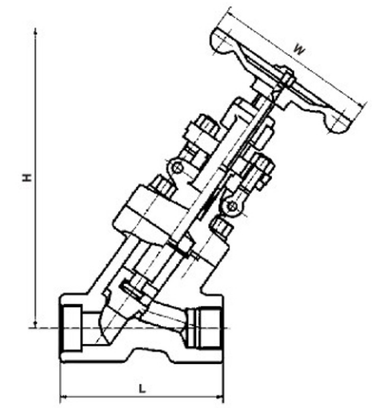

J65Y–1500LB–1"

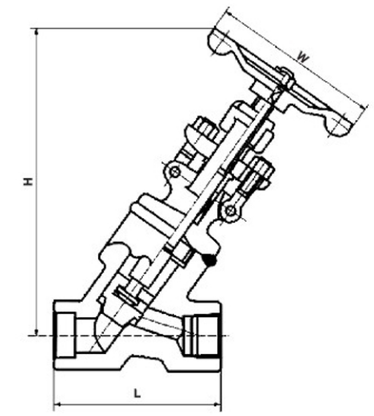

HJ65H–140–DN20

特征和应用规范/Features and applications

- ⊙ 结构：B.B或W.B; OS & Y
- ⊙ 垫片：不锈钢+柔性石墨
- ⊙ 承插焊或螺纹连接
- ⊙ 整体阀座
- ⊙ 承插焊尺寸：ANSI B16.11; JB/T1751
- ⊙ 螺纹尺寸：ANSI B1.20.1; GB/T7306 (Rc)
- ⊙ 设计和制造：API 602; ANSI B16.34 GB/T12224; JB/T 7746
- ⊙ 检验和试验：API 598; JB/T 9092
- ⊙ 主体材质：A105、LF2、F5、F11、F22、F304、F304L、F316、F316L等

- ⊙ Construction: B.B & W.B; OS & Y
- ⊙ Gasket: Stainless steel + graphite
- ⊙ Socket welding & threaded ends
- ⊙ Integral seat
- ⊙ Socket welding dimension: ANSI B16.11; JB/T1751
- ⊙ Screw end dimension: ANSI B1.20.1; GB/T7306 (Rc)
- ⊙ Design & manufacture:API 602; ANSI B16.34 GB/T12224; JB/T 7746
- ⊙ Inspect and test: API 598; JB/T 9092
- ⊙ Body material: A105, LF2, F5, F11, F22, F304, F304L, F316, F316L

尺寸/Dimensions

公称通径 Norminal diameter		mm(in)	10(3/8)	15(1/2)	20(3/4)	25(1)	32(1 1/4)	40(1 1/2)	50(2)
d		mm	7	11	13	18	23	28	33
L	CL800	mm	98	98	98	120	140	140	170
	CL1500	mm	98	98	120	140	140	170	220
H	CL800	mm	240	240	240	290	302	368	370
	CL1500	mm	170	170	195	235	278	278	310
W	CL800	mm	100	100	100	120	160	160	180
	CL1500	mm	125	125	125	160	160	180	200

CL150~800 PN1.6~14.0MPa

承插焊(内螺纹)节流阀/S.W (NPT) Throttle Valve

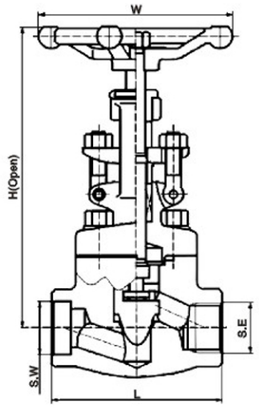

L61H–800LB–1/2"

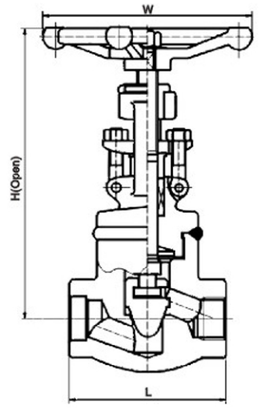

HL11W–40P–DN20

特征和应用规范/Features and applications

- ⊙ 缩径或全径
- ⊙ B.B或W.B;OS & Y
- ⊙ 垫片：不锈钢+柔性石墨
- ⊙ 承插焊或螺纹连接
- ⊙ 整体阀座；节流阀瓣
- ⊙ 承插焊尺寸：ANSI B16.11; JB/T1751
- ⊙ 螺纹尺寸：ANSI B1.20.1; GB/T7306–(Rc)
- ⊙ 设计和制造：API 602; ANSI B16.34 GB/T12224; GB/T12228; GB/T12235
- ⊙ 检验和试验：API 598
- ⊙ 主体材质：A105、LF2、F5、F11、F22、F304、F304L、F316、F316L

- ⊙ Reduced or full port
- ⊙ B.B & W.B;OS & Y
- ⊙ Gasket: Stainless steel+graphite
- ⊙ Socket welding & threaded ends
- ⊙ Integral seat; throttle disc
- ⊙ Socket welding dimension: ANSI B16.11; JB/T1751
- ⊙ Screw end dimension: ANSI B1.20.1;GB/T7306–(Rc)
- ⊙ Design & manufacture:API 602; ANSI B16.34 GB/T12224; GB/T12228; GB/T12235
- ⊙ Inspect and test: API 598
- ⊙ Body material: A105, LF2, F5, F11, F22, F304, F304L, F316, F316L

尺寸/Dimensions

公称通径 Norminal diameter	缩径 Reduced port	mm(in)	8(1/4)	10(3/8)	15(1/2)	20(3/4)	25(1)	32(1 1/4)	40(1 1/2)	50(2)	
	全径 Full port	mm(in)	–	–	10(3/8)	15(1/2)	20(3/4)	25(1)	32(1 1/4)	40(1 1/2)	50(2)
d		mm	6	8	10	13	18	23	28	33	43
L		mm	79	79	79	92	111	120	152	172	220
H(开)		mm	166	166	166	175	206	228	262	300	340
W		mm	100	100	100	100	120	160	160	180	240

CL150~600

法兰节流阀/Flange Throttle Valve

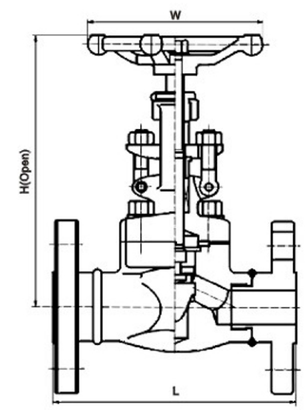

L41H–150LB–1/2"

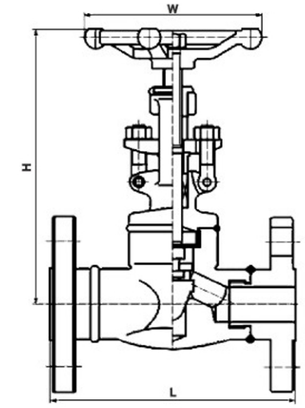

HL41Y–600LB–1"

特征和应用规范/Features and applications

- ⊙ 结构：B.B或W.B; OS & Y
- ⊙ 垫片：不锈钢+柔性石墨
- ⊙ 法兰连接
- ⊙ 整体阀座
- ⊙ 节流阀瓣
- ⊙ 设计和制造：API 602; ANSI B16.34
- ⊙ 法兰尺寸：ANSI B16.5
- ⊙ 结构长度：ANSI B16.10
- ⊙ 检验和试验：API 598
- ⊙ 主体材质：A105、LF2、F5、F11、F22、F304、F304L、F316、F316L

- ⊙ Construction: B.B & W.B;OS & Y
- ⊙ Gasket: Stainless steel+graphite
- ⊙ Flange
- ⊙ Integral seat
- ⊙ Throttle disc
- ⊙ Design & manufacture: API 602; ANSI B16.34
- ⊙ Flange dimension: ANSI B16.5
- ⊙ Face to face: ANSI B16.10
- ⊙ Inspect and test: API 598
- ⊙ Body material: A105, LF2, F5, F11, F22, F304, F304L, F316, F316L

尺寸/Dimensions

公称通径 Norminal diameter		mm(in)	15(1/2)	20(3/4)	25(1)	32(1 1/4)	40(1 1/2)	50(2)
d		mm	10	13	18	23	28	33
L	CL150	mm	108	117	127	140	165	203
	CL300	mm	152	178	203	216	229	267
	CL600	mm	165	190	216	229	241	292
H	CL150	mm	140	154	184	216	232	260
	CL300–600	mm	166	175	206	228	262	300
W		mm	100	100	120	160	160	180

CL150~800 PN1.6~14.0MPa

承插焊(内螺纹)低温闸阀/S.W (NPT) Cryogenic Gate Valve

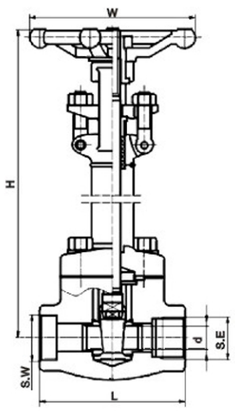

DZ61W-300LB-1"

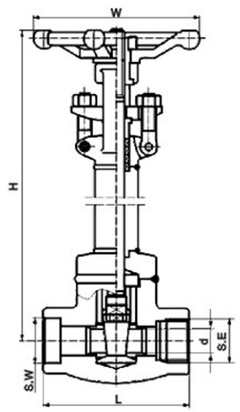

DHZ61W-16P-DN25

特征和应用规范/Features and applications

- ⊙ 缩径或全径
- ⊙ 结构：B.B或W.B; OS & Y
- ⊙ 垫片：不锈钢+柔性石墨
- ⊙ 承插焊或螺纹连接
- ⊙ 可更换阀座

- ⊙ 设计和制造：API 602 & ANSI B16.34
- ⊙ 承插焊端尺寸：ANSI B16.11
- ⊙ 螺纹端尺寸：ANSI B1.20.1
- ⊙ 检验和试验：API 598
- ⊙ 主体材质：F304、F304L、F316、F316L等

- ⊙ Reduced or ful l port
- ⊙ Construction: B.B & W.B; OS & Y
- ⊙ Gasket: Stainless steel+graphite
- ⊙ Socket welding & threaded ends
- ⊙ Replaceable hardfaced seats

- ⊙ Design & manufacture: API 602 & ANSI B16.34
- ⊙ Socket welding dimension: ANSI B16.11
- ⊙ Screw end dimension: ANSI B1.20.1
- ⊙ Inspect and test: API 598
- ⊙ Body material: F304, F304L, F316, F316L

尺寸/Dimensions

公称通径 Norminal diameter		mm(in)	15(1/2)	20(3/4)	25(1)	40(1 1/2)	50(2)
d		mm	10	13	18	28	36
L		mm	79	92	111	120	140
H(开 Open)	≥-60℃	mm	265	269	293	356	393
	≥-100℃	mm	276	279	313	376	413
	<-100℃	mm	296	309	343	406	453
W		mm	100	100	120	160	180

CL150~600

法兰低温闸阀/Flange Cryogenic Gate Valve

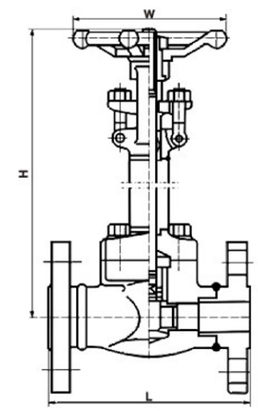

DZ41W-300LB-1"

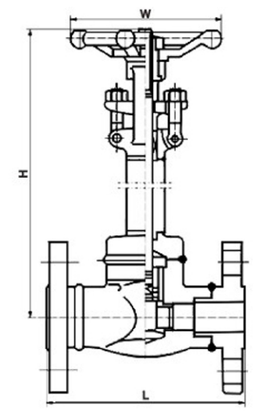

DHZ41Y-600LB-1"

特征和应用规范/Features and applications

- ⊙ 缩径或全径
- ⊙ 结构：B.B或W.B; OS & Y
- ⊙ 垫片：不锈钢+柔性石墨
- ⊙ 法兰连接
- ⊙ 可更换阀座

- ⊙ 设计和制造：API 602 & ANSI B16.34
- ⊙ 结构长度：ANSI B16.10
- ⊙ 法兰尺寸：ANSI B16.5
- ⊙ 检验和试验：API 598
- ⊙ 主体材质：F304、F304L、F316、F316L等

- ⊙ Reduced or full port
- ⊙ Construction: B.B & W.B; OS & Y
- ⊙ Gasket: Stainless steel+graphite
- ⊙ Flange
- ⊙ Replaceable hardfaced seats

- ⊙ Design & manufacture: API 602 & ANSI B16.34
- ⊙ Face to face: ANSI B16.10
- ⊙ Flange dimension: ANSI B16.5
- ⊙ Inspect and test: API 598
- ⊙ Body material: F304, F304L, F316, F316L

尺寸/Dimensions

公称通径 Norminal diameter		mm(in)	15(1/2)	20(3/4)	25(1)	40(1 1/2)	50(2)
d		mm	10	13	18	28	36
L	CL150	mm	108	117	127	165	178
	CL300	mm	140	152	165	190	216
	CL600	mm	165	190	216	241	292
H(开 Open)	≥-60℃	mm	265	269	293	356	393
	≥-100℃	mm	276	279	313	376	413
	<-100℃	mm	296	309	343	406	453
W		mm	100	100	120	160	180

CL150~800 PN1.6~14.0MPa

承插焊(内螺纹)低温截止阀/S.W (NPT) Cryogenic Globe Valve

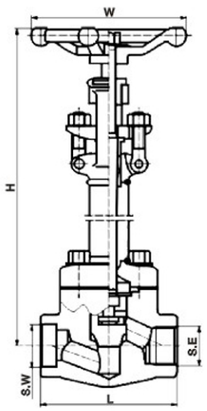

DJ11H-800LB-1"

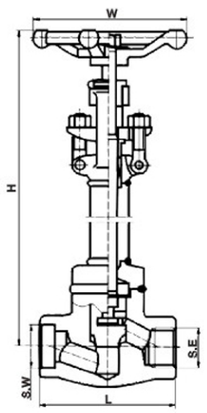

DHJ61Y-140-DN25

特征和应用规范/Features and applications

- ⊙ 缩径或全径
- ⊙ 结构：B.B或W.B; OS & Y
- ⊙ 垫片：不锈钢+柔性石墨
- ⊙ 承插焊或螺纹连接
- ⊙ 整体阀座

- ⊙ 设计和制造：API 602 & ANSI B16.34
- ⊙ 承插焊端尺寸：ANSI B16.11
- ⊙ 螺纹端尺寸：ANSI B1.20.1
- ⊙ 检验和试验：API 598
- ⊙ 主体材质：F304、F304L、F316、F316L等

- ⊙ Reduced or ful l port
- ⊙ Construction: B.B & W.B; OS & Y
- ⊙ Gasket: Stainless steel+graphite
- ⊙ Socket welding & threaded ends
- ⊙ Integral seat

- ⊙ Design & manufacture: API 602 & ANSI B16.34
- ⊙ Socket welding dimension: ANSI B16.11
- ⊙ Screw end dimension: ANSI B1.20.1
- ⊙ Inspect and test: API 598
- ⊙ Body material: F304, F304L, F316, F316L

尺寸/Dimensions

公称通径 Norminal diameter		mm(in)	15(1/2)	20(3/4)	25(1)	40(1 1/2)	50(2)
d		mm	10	13	18	28	33
L		mm	79	92	111	152	172
H(开 Open)	≥-60℃	mm	265	275	306	372	410
	≥-100℃	mm	276	285	326	392	430
	<-100℃	mm	296	315	356	422	470
W		mm	100	100	120	160	180

CL150~600

法兰低温截止阀/Flange Cryogenic Globe Valve

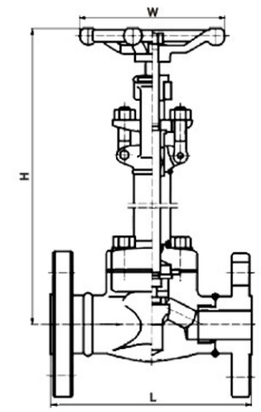

DJ41W-150LB-1 1/2"

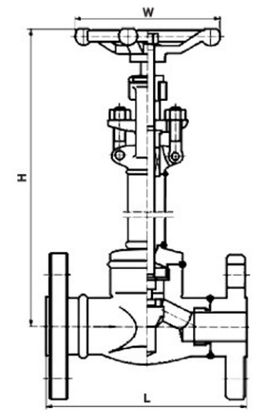

DHJ41W-300LB-1"

特征和应用规范/Features and applications

- ⊙ 缩径或全径
- ⊙ 结构：B.B或W.B; OS & Y
- ⊙ 垫片：不锈钢+柔性石墨
- ⊙ 法兰连接
- ⊙ 整体阀座

- ⊙ 设计和制造：API 602 & ANSI B16.34
- ⊙ 结构长度：ANSI B16.10
- ⊙ 法兰尺寸：ANSI B16.5
- ⊙ 检验和试验：API 598
- ⊙ 主体材质：F304、F304L、F316、F316L等

- ⊙ Reduced or full port
- ⊙ Construction: B.B & W.B; OS & Y
- ⊙ Gasket: Stainless steel+graphite
- ⊙ Flange
- ⊙ Integral seat

- ⊙ Design & manufacture: API 602 & ANSI B16.34
- ⊙ Face to face: ANSI B16.10
- ⊙ Flange dimension: ANSI B16.5
- ⊙ Inspect and test: API 598
- ⊙ Body material: F304, F304L, F316, F316L

尺寸/Dimensions

公称通径 Norminal diameter		mm(in)	15(1/2)	20(3/4)	25(1)	40(1 1/2)	50(2)
d		mm	10	13	18	28	33
L	CL150	mm	108	117	127	165	203
	CL300	mm	152	178	203	229	267
	CL600	mm	165	190	216	241	292
H(开 Open)	≥-60℃	mm	265	275	306	372	410
	≥-100℃	mm	276	285	326	392	430
	<-100℃	mm	296	315	356	422	470
W		mm	100	100	120	160	180

CL150~800 PN1.6~14.0MPa

承插焊(内螺纹)截止止回阀/S.W (NPT) Globe Check Valve

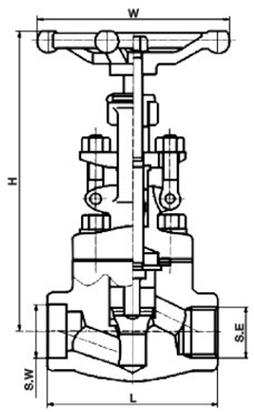

J61H-800LB-1"

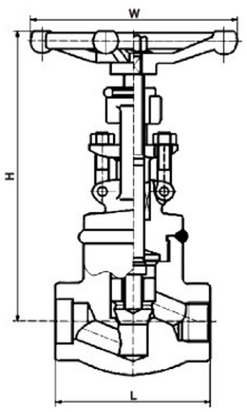

DJ11Y-140-DN25

特征和应用规范/Features and applications

- ⊙ 缩径或全径
- ⊙ 结构：B.B或W.B; OS & Y
- ⊙ 垫片：不锈钢+柔性石墨
- ⊙ 承插焊或螺纹连接
- ⊙ 整体阀座
- ⊙ 设计和制造：API 602 & ANSI B16.34
- ⊙ 承插焊端尺寸：ANSI B16.11
- ⊙ 螺纹端尺寸：ANSI B1.20.1
- ⊙ 检验和试验：API 598
- ⊙ 主体材质：A105、LF2、F5、F11、F22、F304、F304L、F316、F316L等

- ⊙ Reduced or full port
- ⊙ Construction: B.B & W.B; OS & Y
- ⊙ Gasket: Stainless steel+graphite
- ⊙ Socket welding & threaded ends
- ⊙ Integral seat
- ⊙ Design & manufacture: API 602 & ANSI B16.34
- ⊙ Socket welding dimension: ANSI B16.11
- ⊙ Screw end dimension: ANSI B1.20.1
- ⊙ Inspect and test: API 598
- ⊙ Body material: A105, LF2, F5, F11, F22, F304, F304L, F316, F316L

尺寸/Dimensions

公称通径 Norminal diameter	缩径 Reduced port	mm(in)	8(1/4)	10(3/8)	15(1/2)	20(3/4)	25(1)	32(1 1/4)	40(1 1/2)	50(2)	
	全径 Full port	mm(in)	–	–	10(3/8)	15(1/2)	20(3/4)	25(1)	32(1 1/4)	40(1 1/2)	50(2)
d		mm	6	8	10	13	18	23	28	33	43
L		mm	79	79	79	92	111	120	152	172	220
H(开 Open)		mm	166	166	166	175	206	228	262	300	340
W		mm	100	100	100	100	120	160	160	180	240

CL150~600

放空导淋阀/Short Lead Leaching Valve

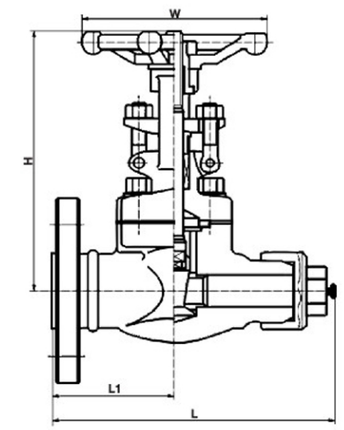

FZ41/21H-300LB-3/4"

特征和应用规范/Features and applications

- ⊙ 缩径或全径
- ⊙ 结构：B.B或W.B; OS & Y
- ⊙ 垫片：不锈钢+柔性石墨
- ⊙ 一端法兰另一端管帽
- ⊙ 可更换阀座
- ⊙ 设计和制造：API 602 & ANSI B16.34
- ⊙ 法兰端尺寸：ANSI B16.5
- ⊙ 外螺纹端尺寸：GB/T 7307
- ⊙ 检验和试验：API 598
- ⊙ 主体材质：A105、LF2、F5、F11、F22、F304、F304L、F316、F316L

- ⊙ Reduced or full port
- ⊙ Construction: B.B & W.B; OS & Y
- ⊙ Gasket: Stainless steel+graphite
- ⊙ One end flange, the other end pipe cap
- ⊙ Replaceable hardfaced seats
- ⊙ Design & manufacture: API 602 & ANSI B16.34
- ⊙ Flange dimension: ANSI B16.5
- ⊙ Male thread end dimension: GB/T 7307
- ⊙ Inspect and test: API 598
- ⊙ Body material: A105, LF2, F5, F11, F22, F304, F304L, F316, F316L

尺寸/Dimensions

公称通径 Norminal diameter	缩径 Reduced port	mm(in)	15(1/2)	20(3/4)	25(1)	32(1 1/4)	40(1 1/2)
	全径 Full port	mm(in)	10(3/8)	15(1/2)	20(3/4)	25(1)	32(1 1/4)
d		mm	10	13	18	23	28
L1	CL150	mm	60	65	70	75	85
	CL300	mm	70	76	82.5	89	95
	CL600	mm	82.5	95	108	114.5	120.5
L	CL150	mm	150	157	179	200	213
	CL300	mm	159	170	193	216	224
	CL600	mm	172	190	220	240	250
H(开 Open)		mm	166	169	193	230	246
W		mm	100	100	120	160	160

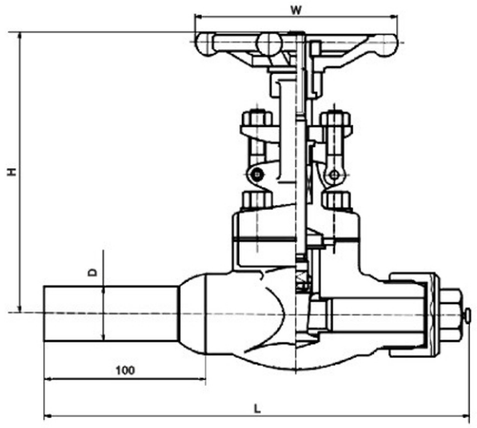

FZ接管/管帽H-800LB-1"

特征和应用规范/Features and applications

- ⊙ 缩径或全径
- ⊙ 结构：B.B或W.B; OS & Y
- ⊙ 垫片：不锈钢+柔性石墨
- ⊙ 一端接管另一端管帽
- ⊙ 可更换阀座

- ⊙ 设计和制造：API 602 & ANSI B16.34
- ⊙ 承插焊端尺寸：GB/T 7307
- ⊙ 检验和试验：API 598
- ⊙ 主体材质：A105、LF2、F5、F11、F22、F304、F304L、F316、F316L

- ⊙ Reduced or full port
- ⊙ Construction: B.B & W.B; OS & Y
- ⊙ Gasket: Stainless steel+graphite
- ⊙ One end jointing pipe, the other end pipe cap
- ⊙ Replaceable hardfaced seats

- ⊙ Design & manufacture: API 602 & ANSI B16.34
- ⊙ Socket welding dimension: GB/T7307
- ⊙ Inspect and test: API 598
- ⊙ Body material: A105, LF2, F5, F11, F22, F304, F304L, F316, F316L

尺寸/Dimensions

公称通径 Norminal diameter	mm(in)	15(1/2)	20(3/4)	25(1)	32(1¼)	40(1½)	2
d	mm	10	13	18	23	28	36
D	mm	22	27	34	42	48	60
L	mm	229	238	264	275	278	308
H(开 Open)	mm	166	169	193	230	246	290
W	mm	100	100	120	160	160	180

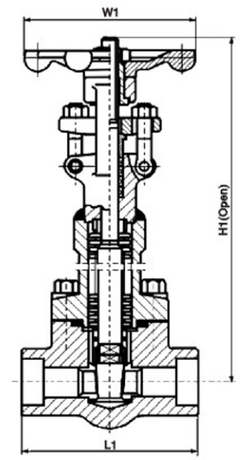

波纹管闸阀 Bellows gate valve

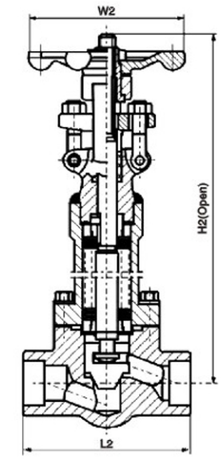

波纹管截止阀 Bellows globe valve

特征和应用规范/Features and applications

- ⊙ 缩径或全径
- ⊙ 结构：B.B或W.B; OS & Y
- ⊙ 垫片：不锈钢+柔性石墨
- ⊙ 承插焊或螺纹连接
- ⊙ 密封副材质：按“客户须知”和使用环境而定

- ⊙ 设计和制造：API 602 & ANSI B16.34
- ⊙ 承插焊端：ANSI B16.11或JB/T 175-95
- ⊙ 螺纹端：ANSI B 1.20.1或GB7306-87
- ⊙ 阀门试验和检验：API 598
- ⊙ 主体材料：A105、LF2、F5、F11、F22、F304、F304L、F316、F316L

- ⊙ Reduced or full port
- ⊙ Construction: B.B & W.B; OS & Y
- ⊙ Gasket: Stainless steel+graphite
- ⊙ Socket welding & threaded ends
- ⊙ Material for hard trim is depend on client notice & operating condition

- ⊙ Design & manufacture: API 602 & ANSI B16.34
- ⊙ Socket welding dimension: ANSI B16.11 & JB/T 175-95
- ⊙ Screw end dimension: ANSI B 1.20.1 & GB 7306-87
- ⊙ Inspect and test: API 598
- ⊙ Body material: A105, LF2, F5, F11, F22, F304, F304L, F316, F316L

缩径波纹管闸阀尺寸
Reduced bellows gate valve dimensions

NPS	1/2	3/4	1	1½	2
L1	79	92	111	120	140
H1	237	250	312	400	438
W1	100	100	120	160	180

缩径波纹管截止阀尺寸
Reduced bellows globe valve dimensions

NPS	1/2	3/4	1	1½	2
L2	79	92	111	152	172
H2	235	236	285	320	400
W2	100	100	120	160	180

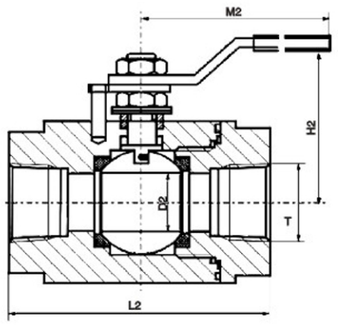

球阀 (2PIECE BALL VALVE)

特征和应用规范/Features and applications

⊙ 缩径或全径
⊙ 结构：浮动球阀
⊙ 垫片：PTFE
⊙ 承插焊或螺纹连接
⊙ 密封副材质：按客户要求而定

⊙ 主体材质：A105、LF2、F304、F316、F304L、F316L
⊙ 承插焊标准：ANSI B16.11或JB/T 175–95
⊙ 螺纹标准：ANSI B1.20.1或GB7306–87
⊙ 阀门检验和试验：API 598
⊙ 设计制造：API 608、API 6D

⊙ Reduced or full Port
⊙ Construction: Floating ball
⊙ Gasket: PTFE
⊙ Socket welding & threaded ends
⊙ Sealing material: Determined according to customer requirements

⊙ Body material: A105, LF2, F304, F316, F304L, F316L
⊙ Socket welding standards: ANSI B16.11 or JB/T 175–95
⊙ Thread standard: ANSI B1.20.1 or GB7306–87
⊙ Valve inspection and test: API 598
⊙ Design & manufacture: API 608, API 6D

全径尺寸/Full port dimensions

NPS	1/4	3/8	1/2	3/4	1	1 1/4	1 1/2	2
L1	70	70	76	85	106	113	128	140
T	1/4NPT	3/8NPT	1/2NPT	3/4NPT	1NPT	1 1/4NPT	1 1/2NPT	2NPT
d1	6	9	14	20	25	32	38	49
H1	74	74	83	90	95	105	110	120
M1	140	140	140	170	170	245	245	285

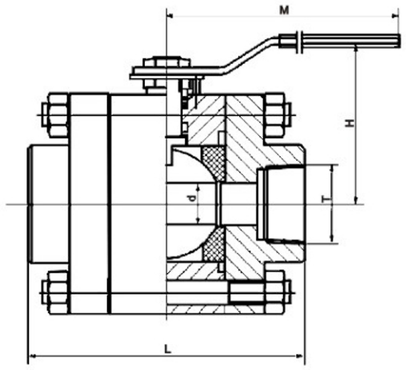

球阀 (3PIECE BALL VALVE)

特征和应用规范/Features and applications

⊙ 缩径或全径
⊙ 结构：浮动球阀
⊙ 垫片：PTFE
⊙ 承插焊或螺纹管连接
⊙ 密封副材质：按客户要求而定

⊙ 主体材质：A105、LF2、F304、F316、F304L、F316L
⊙ 承插焊标准：ANSI B16.11或JB/T 175–95
⊙ 螺纹标准：ANSI B1.20.1或GB7306–87
⊙ 阀门检验和试验：API 598
⊙ 设计制造：API 608、API 6D

⊙ Reduced or full port
⊙ Construction: Floating ball
⊙ Gasket: PTFE
⊙ Socket welding & threaded ends
⊙ Sealing material: Determined according to Customer requirements

⊙ Body material: A105, LF2, F304, F316, F304L, F316L
⊙ Socket welding standards: ANSI B16.11 or JB/T 175–95
⊙ Thread standard: ANSI B1.20.1 or GB7306–87
⊙ Valve inspection and test: API 598
⊙ Design & manufacture: API 608, API 6D

全径尺寸/Full port dimensions

NPS	1/4	3/8	1/2	3/4	1	1 1/4	1 1/2	2
L	92	92	92	112	127	140	152	178
T	1/4NPT	3/8NPT	1/2NPT	3/4NPT	1NPT	1 1/4NPT	1 1/2NPT	2NPT
d	8	10	14	20	23	32	35	50
H	65	65	65	73	90	92	98	110
M	123	123	123	160	160	195	195	250

一、客户应根据样本所列的型号订货，特殊要求，在合同中加以说明。
Client should place order as per the items listed in the catalogue, it should be pointed Out if there are some special requirements.

1、阀门压力等级：公制PN(MPa)，英美制CLASS(磅级)和日制(K级)。
2、阀门规格：公制以DN(mm)表示；英美制以NPS(in)表示。
3、连接形式：法兰连接、承插焊连接、螺纹连接、对焊连接和卡套连接等。
4、法兰连接密封形式：突面法兰、凹凸面法兰、环密封法兰和榫槽法兰等。
5、阀门结构长度执行标准：ANSI B16.10; GB/T1222189等。
6、阀门的结构形式和特征。
7、阀门主要零件的材质。
8、密封副材质的匹配(闸板/密封圈；阀瓣/阀座)。
9、驱动方式等。

1、Valve pressure rate: metric PN(MPa), Inch series Class(LB), Japanese(K)
2、Specification: metric DN(mm); inch NPS(in)
3、Connection type: flange, socket welding, thread, butt–welding and Socket connection etc.
4、Flanged connection sealing tyqe: FR, FM, RTJ, TG
5、Face to face conform to ANSI B16.10 and GB/T 12221–89 etc.
6、Valve structure and feature
7、Main part material
8、Match of hard trim material; wedge and seal ring, disc and seat
9、Operation

二、凡是对焊连接形式(BW)，必须在订货合同或技术协议中写明管子号或管子规格尺寸(包括管子外径和壁厚)。
Client should mark the SCH No. or pipe specifications (external diameter and thickness) in contract or technical agreement when you order B.W ends valves.

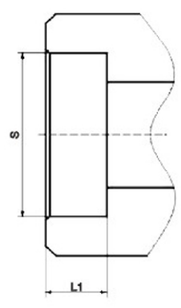

SW

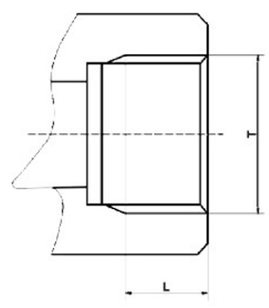

NPT

三、各国承插孔尺寸和螺纹端尺寸/Socket welded and thread ends dimensions:

规格 Specification		承插孔尺寸 Socket welded end dimension						螺纹端尺寸T(in) Screw end dimension (in)	
		中国 JB		美国 ANSI		日本 JIS		Rc, PT	NPT
DN	NPS(in)	S	L1	S	L1	S	L1	牙形角55° angle of thread 55°	牙形角60° angle of thread 60°
8	1/4	14.5	10	14.2	10	14.3	9.6	1/4	
10	3/8	18.0	10	17.6	10	17.9	9.6	3/8	
15	1/2	22.5	10	21.8	10	22.2	9.6	1/2	
20	3/4	28.5	11	27.2	13	27.7	12.7	3/4	
25	1	34.5	12	33.9	13	34.5	12.7	1	
32	1 1/4	43.0	15	42.7	13	43.2	12.7	1 1/4	
40	1 1/2	49.0	15	48.8	13	49.1	12.7	1 1/2	
50	2	61.0	16	61.2	16	61.1	15.9	2	

注：Rc中国密封内螺纹标准，PT日本密封内螺纹标准，NPT美国密封内螺纹标准。
Note：Rc is the china seal inside screw standard code. PT is Japanese seal inside screw standard code. NPT is American seal inside screw standard code.

四、阀门型号编制方法(磅级改变压力数值代号和规格代号) Code rules of valve: Method for editing valve type (according to class, pressure and specification etc)

1	2	3	4	5	6	7	8
特种阀门代号 Special valve code	体盖连接形式 Bonnet Connection type	阀门类型代号 Valve type code	连接形式代号 Connection form codes	副密封材料代号 Material surface codes	PN数值代号 PN codes		阀体材料代号 Body Material codes
抗硫阀 Sulfur resist valve K	略 Omit	闸阀 Gate valve Z	内螺纹T Female thread 1	13Cr/13Cr H	1.6MPa 16		20Mn(A105) C
放空阀 Discharge valve F	中法兰螺栓 Flange blot H	截止阀 Globe valve J	外螺纹G Male thread 2	13Cr/13Cr+STL Y	2.0MPa 20		1Cr5Mo(F5) I
带弹簧止回阀 Spring check valve T	体盖焊接 Bonnet weldin P	止回阀 Check vavle H	一端承插焊一端内螺纹 One end is socket welding and the other is inside thread 3	13Cr+STL/13Cr+STL C	2.5MPa 25		15CrMo(F11) II
低温阀 Cryogenic valve D	自密封 seal forged steel	节流阀 Throttle valve L	法兰连接 Flange end 4	304+STL/304 D	4.0MPa 40		12Cr1MoV(F22) V
		截止止回阀 Globe check JH	对接焊 Butt welding end 5	304/304 P	5.0MPa 50		0Cr19Ni10(304) P
		Y型过滤器 Y Type strainer G	承插焊 Socket welding 6	316+STL/316 E	6.4MPa 64		00Cr17Ni12Mo2(F316) R
		球阀 Ball valve Q	卡套式 Cutting ferrule type 9	316/316 R	10.0MPa 100		00Cr19Ni11(F304L) PL
				304L/304L J	14.0MPa 140		00Cr17Ni14Mo2(F316L) RL
				316L/316L K	16.0MPa 160		1Cr18Ni9Ti(321) PH
				316+STL/316+STL L	25.0MPa 250		1Cr18Ni11Nb(347) RH
				H.C/H.C A	32.0MPa 320		LF2 F
				M./M. M	42.0MPa 420		
				304或316/PTFEE F			

阀门类型代号 Valve type code	结构长度
闸阀 Gate valve Z	和JB/T308–75的编号原则相同 The rule of numbering Is same as JB/T308–75
截止阀 Globe valve J	
止回阀 Check valve H	

说明Note:

1、PN≥2.5MPa，碳钢阀体材料代号“C”省略。
2、凡是全径阀门在编制数值前加“F”，例如：Z61H800LBF1/2和Z51Y160F25，其中F1/2和“F25”表示全径，缺省无代号。
3、凡是抗硫阀门其内件均为316，密封面双堆STL。
4、中法兰连接B.B结构，其密封垫为不锈钢夹柔性石墨缠绕垫。
5、小口径钢阀门一般为手轮驱动。其它形式要说明。

1. when PN≥2.5Mpa, material code C of carbon steel body can be omit
2. Every full port valve should add F to type code, for example, Z61H800LBF1/2 and Z51Y160F25, the symbol F1/2 and F25 is show full port, reduced port needn't code.
3. The trims of every resist sulfur valve are 316 stainless steel and sealing face is STL
4. Bolted Bonnet, sealing gasket is stainless steel with flexible graphite spiral wound gasket
5. Small valve usually adopt hand wheel, if you need other, please tell us

五、对焊标准/Butt welding parameter

ANSI B16.25

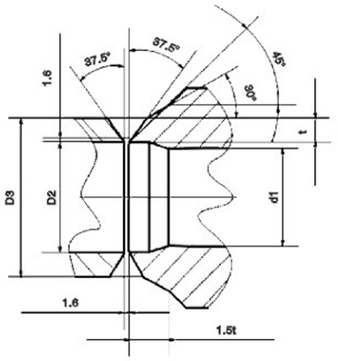

A

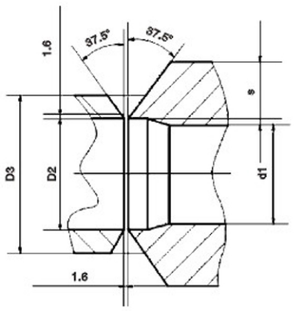

B

PIPE	SIZE	1/4	3/8	1/2	3/4	1	1 1/4	1 1/2	2
STD	Ds	13.7	17.1	21.3	26.7	33.4	42.2	48.3	60.3
	D2	9.2	12.5	15.8	20.9	26.6	35.1	40.9	52.5
	t	2.2	2.3	2.8	2.9	3.4	3.6	3.7	3.9
XS	D2	7.7	10.7	13.9	18.9	24.3	32.5	38.1	49.3
	t	3.0	3.2	3.7	3.9	4.5	4.9	5.1	5.5
XXS	D2			6.4	11.0	15.2	22.8	27.9	38.2
	t			7.5	7.8	9.1	9.7	10.2	11.1
Sch40	D2	9.2	12.5	15.8	20.9	26.6	35.1	40.9	52.5
	t	2.2	2.3	2.8	2.9	3.4	3.6	3.7	3.9
Sch80	D2	7.7	10.7	13.9	18.9	24.3	32.5	38.1	49.3
	t	3.0	3.2	3.7	3.9	4.5	4.9	5.1	5.5
Sch160	D2			11.8	15.6	20.7	29.5	34.0	42.9
	t			4.8	5.6	6.4	6.4	7.1	8.7

注：① S>22.2mm按A图形加工 Fig A; Applicable for thickness of valve wall S>22.2mm.
② S<22.2mm按B图形加工Fig B; Applicable for thickness of valve wall S<22.2mm.

六、美标法兰连接结构长度(ANSI B16.10)和法兰端尺寸(ANSI B16.5)
Face to face (ANSI B16.10) and flanged ends dimensions (ANSI B16.5)

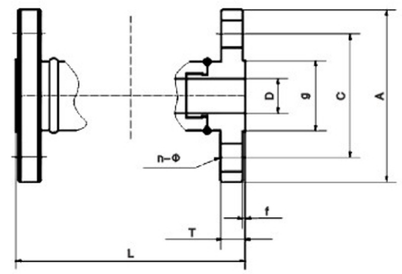

CL150–CL300(RF)

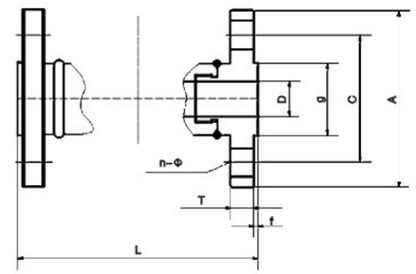

CL600–CL1500(RF)

Class	NPS	L(ANSI B16.10)			ANSI B16.5							
		闸阀 Gate valve	截止阀/升降式止回阀 Globe valve/Lift check valve	旋启式止回阀 Swing check	A	C	g	D	T	f	Φ	n
150	1/2	108			90	60.5	35	15	10	2	16	4
	3/4	117			100	70	43	20	11			
	1	127			110	79.5	51	25	11.6			
	1 1/4	140			115	89	63.5	32	13.2			
	1 1/2	165			125	98.5	73	40	14.7			
	2	178	203		150	120.5	92	50	16.3		20	
300	1/2	140	152		95	66.5	35	15	14.7	2	16	4
	3/4	152	178		115	82.5	43	20	16.3		20	
	1	165	203	216	125	89	51	25	17.9		20	
	1 1/4	178	216	229	135	98.5	63.5	32	19.5		20	
	1 1/2	190	229	241	155	114.5	73	40	21.1		22	
	2	216	267		165	127	92	50	22.7		20	8
600	1/2	165			95	66.5	35	15	15	7	16	4
	3/4	190			115	82.5	43	20	16		20	
	1	216			125	89	51	25	18		20	
	1 1/4	229			135	98.5	63.5	32	21		20	
	1 1/2	241			155	114.5	73	40	23		22	
	2	292			165	127	92	50	26		20	8
900 & 1500	1/2	216			120	82.5	35	15	22.5	7	22	4
	3/4	229			130	89	43	20	25.5		22	
	1	254			150	101.5	51	25	29		26	
	1 1/4	279			160	111	63.5	32	29		26	
	1 1/2	305			180	124	73	40	32		30	
	2	368			215	165	92	50	38.5		26	8

ANSI B16.10 & ANSI B16.5

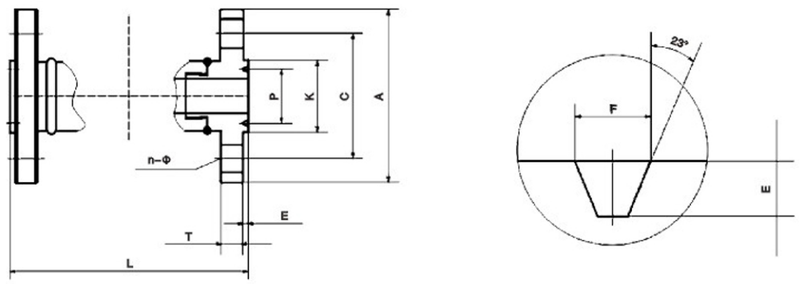

RTJ

CLASS	SIZE	NPS					
		1/2	3/4	1	1¼	1½	2
900 & 1500	L	216	229	254	279	305	371.2
	A	120	130	150	160	180	215
	C	82.5	89	101.5	111	124	165
	K	60.5	66.5	71.5	81	92	124
	P	39.67	44.45	50.8	60.32	68.28	95.25
	T	22.5	25.5	29	29	32	38.5
	F	8.74	8.74	8.74	8.74	8.74	11.91
	E	6.4					7.92
	N-Φ	4-22	4-22	4-26	4-26	4-30	8-26
2500	L	264	273	308	352.2	387.2	454.2
	A	130	140	160	185	205	235
	C	88.9	95.2	108	130	146	171.5
	K	65	73	82.5	102	114	133
	P	42.9	50.8	60.32	72.2	82.5	101.6
	T	30.5	32	35	38.5	44.5	51
	F	8.74	8.74	8.74	11.91	11.91	11.91
	E	6.4			7.92		
	N-Φ	4-22	4-26	4-26	4-29	4-32	4-29

七、中国机标(JB)法兰连接结构长度和法兰端尺寸
Face to face and ends dimension of flanged valve (JB)

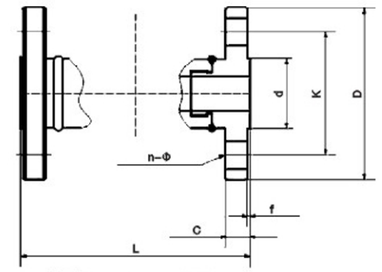

凸面 Protuberate(RF)

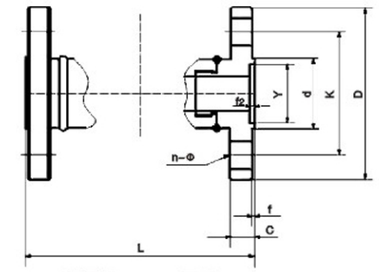

凹面 Concave(FM)

尺寸 Dimension / 压力 Pressure / 标准 Standard		JB/T96-95 JB/T97-95		JB/T79.1~79.2-94; JB/T82.1~82.2-94								
公称压力 PN(MPa) Nominal pressure	DN	L		d	K	D	Y	f2	C	f	Φ	n
		闸阀 Gate valve	截止阀 Globe valve 升降止回阀 lift check valve 旋启止回阀 swing check valve									
1.6	15	130	130	45	65	95			14	2	14	4
	20	150	150	55	75	105			14	2	14	
	25	160	160	65	85	115			14	2	14	
	32	180	190	78	100	135			16	2	18	
	40	200	200	85	110	145			16	3	18	
	50	250	230	100	125	160			16	3	18	
	65	265	290	120	145	180			18	3	18	
2.5 & 4.0	15	130	与PN1.6相同 The same as PN 1.6				40	4	16	与PN1.6相同 The same as PN 1.6		
	20	150					51		16			
	25	160					58		16			
	32	180					66		18			
	40	200					76		18			
	50	250					88		20			
	65	265					110		22	3	18	8
		280										

说明Note：1、PN4.0MPa法兰端如果必须是突面(RF)法兰一定要注明，否则按凹法兰供货。1. Please mark flange type when you offer flange that normal pressure is 4.0Mpa, or we will suppose it as Female Flange 2、PN2.5MPa DN65结构长度“L”为265mm；PN4.0MPa DN65结构长度“L”为280mm。2、Face to face dimension is 265mm when normal diameter is 65mm and normal pressure is 2.5Mpa; Face to face dimension is 280mm when normal diameter is 65 mm and normal pressure is 4.0Mpa.

七、中国机标(JB)法兰连接结构长度和法兰端尺寸
Face to face and ends dimension of flanged valve (JB)

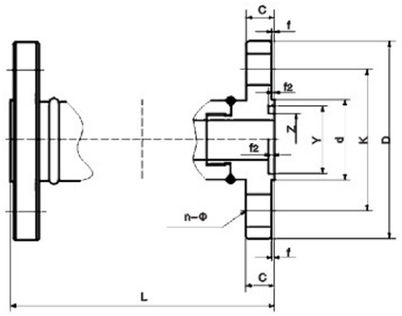

(槽面G)
(Mortise G)

(凹面FM)
(Concave FM)

压力 Pressure \ 标准 Standard		JB/T96-95 JB/T97-95		JB/T79.1~79.2-94; JB/T82.1~82.2-94									
PN (Mpa)	DN	L 闸阀 Gate valve	L 截止阀 Globe valve 升降止回阀 lift check valve 旋启止回阀 swing check valve	d	K	D	Y	f2	C	f	Φ	n	Z
6.4	15	170	170	55	75	105	40	4	18	2	14	4	28
	20	190	190	68	90	125	51		20	2	18		35
	25	210	210	78	100	135	58		22	2	18		42
	32	230	230	82	110	150	66		24	2	23		50
	40	250	260	g5	125	165	76		24	3	23		60
	50	250	300	105	135	175	88		26	3	23		72
	65	280	340	130	160	200	110		28	3	23	8	94
10.0	15	与 PN1.6 相同 The same as PN 1.6		与 PN1.6 相同 The same as PN 1.6			与 PN1.6 相同 The same as PN 1.6		20	与 PN1.6 相同 The same as PN 1.6			28
	20								22				35
	25								24				42
	32								24				50
	40								26				60
	50			112	145	195			28	3	25	4	72
	65			138	170	220			32	3	25	8	94
16.0	15	170	与 PN1.6 相同 The same as PN 1.6	52	75	110	与 PN1.6 相同 The same as PN 1.6		24	2	18	4	无 null
	20	190		62	90	130			26	2	23	4	
	25	210		72	100	140			28	2	23	4	
	32	230		85	115	165			30	2	25	4	
	40	260		92	125	175			32	3	27	4	
	50	300		132	165	215			36	3	25	8	
	65	340		152	190	245			44	3	30	8	

说明Note：PN≥6.4MPa法兰密封形式一般为凹面，用户其它要求要注明。
When PN≥6.4MPa, Flange Sealing Type Usually is Female. Please mark if you have some other special requirements.

主要规范和标准/Mainly specification and standard

序号 NO.	规范和标准代号CODE	规范和标准名称NAME	备注 NOTE
1	GB/T 13927–2008	通用阀门压力试验General valve pressure testing	
2	JB/T 9092–99	阀门的检验和试验Valve inspection and testing	
3	SH 3064–94	石油化工钢制通用阀门选用、检验和验收 Oil & chemicals carbon steel general valve choose selection, test & inspection	
4	GB/T 12221–2005	法兰连接金属阀门结构长度 Flanged metal valve–Face to face	
5	GB/T 12224–2005	钢制阀门一般要求General requirements for industrial steel valves	
6	GB/T 12228–2006	通用阀门碳素钢锻件技术条件 Standard specification For Carbon Steel Forgings For General Valves	
7	GB/T 12234–2007	通用阀门法兰和对焊连接钢制闸阀 General purpose industrial valves–flanged and butt – welding gate valve	
8	GB/T 12235–2007	通用阀门法兰连接钢制截止阀和升降式止回阀 General purpose industrial valves–flanged steel globe valves and lift check valves	
9	GB/T 12236–2007	通用阀门钢制旋启式止回阀 General purpose industrial valves–steel swing check valve	
10	GB/T 12237–2007	通用阀门法兰和对焊连接钢制球阀 General purpose industrial valves–flanged and butt–welding ball valve	
11	JB/T 308–2004	阀门型号编制方法 Complied Method For Valve Type	
12	JB/T 96–95	截止阀、节流阀和止回阀结构长度 Check valve & throttle valve & globe valve– Face to face	含旋启式止回阀 Including swing check valve
13	JB/T97–95	闸阀结构长度 Gate Valve –Face To Face	
14	JB/T 82.1–94	凸面对焊钢制管法兰 Raised Face Butt–welding Casting Steel Pipe Flange	又称：对焊式凸面平法兰(RF) Sealing type: RF; FF
15	JB/T 82.2–94	凹凸面对焊钢制管法兰 Male–Female Butt–welding Casting Steel Pipe Flange	
16	JB/T 82.4–94	环连接面对焊钢制管法兰 Ring Type Joint Butt–welding Casting Steel Pipe Flange	又称：环密封法兰(RTJ)或(RJ) Sealing type: RTJ; RJ
17	JB/T 7749–95	低温阀门技术条件 Technical specifications for Cryogenic valve	
18	JB/T 1751–95	承插焊端部尺寸 Socket–Welding Ends	
19	GB 7306–87	密封锥管螺纹尺寸 Pipe Threads, General Purpose (Inch)	牙形角为55° 内锥管螺纹代号为Rc Angle: 55° Code: Rc
20	HG 20592–97	法兰连接尺寸和密封面型式 Seal type and flange end dimensions	型式、参数(欧洲体系) Reference to European system
21	NACE MR0175	含硫油气管路专用阀门规范 Standard Material Requirnements – Sulfide Stress Cracking Resistant Metallic Materials for Oilfield Equipment	美国防腐工程学会 National Association of Corrosion Engineers
22	ASME/ANSI B16.34	法兰连接和对焊连接阀门 Valves Flanged Threaded and Welding End	壳体壁厚和壳体材料压力–温度关系 Relation between wall thickness and material temperature–pressure rate
23	ASME/ANSI B16.10	法兰连接和对焊连接阀门结构长度Face to Face and End to End Dimensions–flanged and butt–welding valves	
24	ASME/ANSI B16.5	法兰端部尺寸 Pipe Flanges & flanged Fittings	主要形式为RF或RJMain sealing type: RF&RJ
25	ANSI B1.20.1	密封锥管螺纹尺寸 Pipe Threads, General Purpose (Inch)	牙形角60° 内锥管螺纹代号FNPTAngle: 60° Code: FNPT
26	ASME/ANSI B16.11	承插焊端部尺寸 Forged Steel Fittings, Socket–Welding And Threaded	代号为：SWCode: SW
27	ASME/ANSI B16.25	对接焊端部尺寸Butt Welding Ends	代号为：BWCode: BW
28	API 598	阀门检验和试验Valve inspection and testing	
29	API 600	法兰连接和对焊连接钢制闸门 Bolted bonnet steel gate valves for petroleum and natural gas industries–modified national adoption	压力级CLASS150–2500；F1"–24"全径 CLASS150–2500NPS1"–24" (full port)
30	API 602	紧凑型钢制阀门Compact steel gate valves–flanged, threaded welding, and extended body ends	压力级CLASS150–2500; 1/4"~3"缩径 CLASS150~1500 NPS1/4"–4" (reduced port)
31	BS 5352	石油化工和有关工业用≤50毫米闸阀、止回阀、球阀 Specification for steel wedge gate, globe and check valves 50 mm and smaller for the petroleum, petrochemicall and allied industries	
32	BS 6755	阀门的检验和试验 Testing of valves. Specification for fire type–testing requirements	
33	JIS B2002	法兰连接和对焊连接阀门结构长度Face to Face and End to End Dimensions–flanged and butt–welding valves	
34	JIS B2212–B2216	法兰端部尺寸Flanged ends	RF

符号	名称 Name
GB	中国国家标准 China national standard
GB/T	中国国家推荐性标准 China national recommended standard
JB	中国机械部标准 Ministry of mechanical industry standard
HG	中国化工部标准 Ministry of chemical industry standard

符号	名称 Name
SH	中国石油化工部标准Ministry of petroleum andchemical industry standard
ANSI	美国国家标准American National Standards Institute Americannational standards institute
ASME	美国机械工程师协会标准 American Society of Mechanical Engineers
API	美国石油学会标准 American Petroleum Institute

符号	名称 Name
NACE	美国防腐工程学会标准National Association of Corrosion Engineers
BS	英国国家标准 American Society for Testing and Materials British standard
JIS	日本工业标准Japanese institute standard
ISO	国际标准化组织标准 International organization for standardization

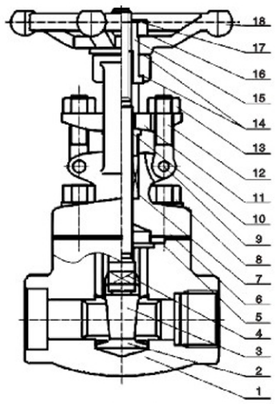

闸阀 Gate valve

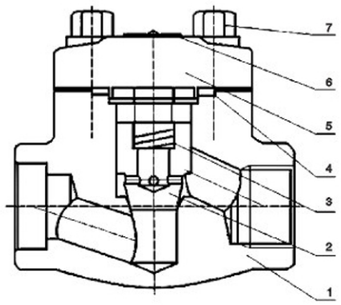

升降式止回阀 Piston check valve

序号 NO.	零件名称 Part name	数量 Qty.	ASTM规范 Specifications								
			A105	A350	A182						
				LF2	F5	F11	F22	F304	F304L	F316	F316L
1	阀体 Body	1	A105	LF2	F5	F11	F22	F304	F304L	F316	F316L
2	阀座 Seat	2	A276–420+STL					304+STL	304L+STL	316+STL	316L+STL
3	闸板 Wedge	1	A276–420					304+STL	304L+STL	316+STL	316L+STL
4	阀杆 Stem	1	A276–410					A276–304	A276–304L	A276–316	A276–316L
5	垫片 Gasket	1	304+柔性石墨 Graphite					316+柔性石墨 Graphite			
6	阀盖 Bonnet	1	A105	LF2	F5	F11	F22	F304	F304L	F316	F316L
7	填料 Packing	1set	石墨 Graphite					石墨 Graphite			
8	中部螺栓 Bolt	4	A193–B7	A320–L7	A193–B16			A193–B8 A193–B8M			
9	无头销钉 Pin	2	A276–410					A276–304			
10	压盖 Gland	1	A276–410					A276–304		A276–316	
11	压板 Gland flange	1	A105					F304			
12	活节螺栓 Bolt	2	A193–B7	A320–L7	A193–B16			A193–B8		A193–B8M	
13	螺母 Nut	2	A194–2H	A194–7	A194–4			A194–8		A194–B8M	
14	垫片 Gasket	2	A276–410								
15	阀杆升降螺母 Nut	1	A276–410					A276–410			
16	名牌 Name plate	1	铝 aluminum								
17	螺母 Nut	1	A108–1020								
18	手轮 Handwheel	1	A47								

序号 NO.	零件名称 Part name	数量 Qty.	ASTM规范 Specifications								
			A105	A350	A182						
				LF2	F5	F11	F22	F304	F304L	F316	F316L
1	阀体 Body	1	A105	LF2	F5	F11	F22	F304	F304L	F316	F316L
2	阀瓣 Disc	1	A276–420					304+STL	304L+STL	316+STL	316L+STL
3	弹簧 Spring	1	316								
4	垫片 Gasket	1	304+石墨 Graphite					316+石墨 Graphite			
5	阀盖 Bonnet	1	A105	LF2	F5	F11	F22	F304	F304L	F316	F316L
6	名牌 Name plate	1	铝 aluminum								
7	螺栓 Bolt	4	A193–B7	A320–L7	A193–B16			A193–B8		A193–B8M	

说明Note: STL为stellite硬质合金; 也可按客户要求生产。STL is stellite, can also manufacture as per customer's requirement.

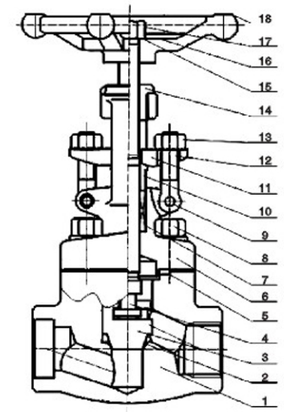

截止阀 Globe valve

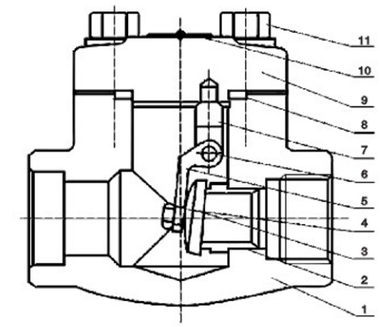

旋启式止回阀 Swing check valve

序号 NO.	零件名称 Part name	数量 Qty.	选材组合 Select material								
			A105	A350	A182						
				LF2	F5	F11	F22	F304	F304L	F316	F316L
1	阀体 Body	1	A105	LF2	F5	F11	F22	F304	F304L	F316	F316L
2	阀座 Seat	1	13Cr					304+STL	304L+STL	316+STL	316L+STL
3	阀瓣 Disc	1	A276–420					304+STL	304L+STL	316+STL	316L+STL
4	阀杆 Stem	1	A276–410					A276–304	A276–304L	A276–316	A276–316L
5	垫片 Gasket	1	304+柔性石墨 Graphite					316+柔性石墨 Graphite			
6	阀盖 Bonnet	1	A105	LF2	F5	F11	F22	F304	F304L	F316	F316L
7	填料 Packing	1	石墨 Graphite					石墨 Graphite			
8	螺栓 Blot	4	A193–B7	A320–L7	A193–B16			A193–B8		A193–B8M	
9	无头销钉 Pin	2	A276–410					A276–304			
10	压盖 Gland	1	A276–410					A276–304		A276–316	
11	压板 Gland fklange	1	A105					F304			
12	活节螺栓 Blot	2	A193–B7	A320–L7	A193–B16			A193–B8		A193–B8M	
13	螺母 Nut	2	A194–2H	A194–7	A194–4			A194–8		A194–8M	
14	阀杆升降螺母 Nut	1	A276–410					A276–410			
15	垫片 Gasket	1	A108–1020								
16	名牌 Name plate	1	铝 aluminum								
17	螺母 Nut	1	A194–2H								
18	手轮 Handwheel	1	A47								

序号 NO.	零件名称 Part name	数量 Qty.	选材组合 Select material								
			A105	A350	A182						
				LF2	F5	F11	F22	F304	F304L	F316	F316L
1	阀体 Body	1	A105	LF2	F5	F11	F22	F304	F304L	F316	F316L
2	阀座 Seat	1	A276–420+STL					304	304L	316	316L
3	阀瓣 Disc	1	A276–420					304	304L	316	316L
4	螺母 Nut	1	A194–8								
5	摇臂 rocker	1	A351–CF8M								
6	销钉 Pin	1	A276–304								
7	摇臂定位销	1	A276–420					A276–304		A276–316	
8	垫片 Gasket	1	304+石墨 Graphite					316+石墨 Graphite			
9	阀盖 Bonnet	1	A105	LF2	F5	F11	F22	F304	F304L	F316	F316L
10	名牌 Name plate	1	铝 aluminum								
11	螺栓 Bolt	4	A193–B7	A320–L7	A193–B16			A193–B8		A193–B8M	

说明Note: STL为stellite硬质合金；也可按客户要求生产。STL is stellite, can also manufacture as per customer's requirement.

主要材质化学成分和机械性能/Material chemical analysis and mechanical capacity

材料种类 Material type		碳钢 Carben steel	低温钢 A350 Low temperature steel		合金钢 A182 Alloy steel A182			奥氏体不锈钢 A182 Stainless steel A182					
		A105	LF2	LF3	F5	F11	F22	F304	F316	F304L	F316L	F321	F347
化学成分 % Chemical composition	C	≤0.35	≤0.3	≤0.2	≤0.15	0.1～0.2	0.05~0.15	≤0.08	≤0.08	≤0.035	≤0.035	≤0.08	≤0.08
	Si	0.1~0.35	0.15～0.3	0.2～0.35	≤0.5	0.5～1.0	≤0.5	≤1.0	≤1.0	≤1.0	≤1.0	≤1.0	≤1.0
	Mn	0.6～1.05	0.6～1.35	≤0.9	0.3～0.6	0.3～0.8	0.3～0.6	≤2.0	≤2.0	≤2.0	≤2.0	≤2.0	≤2.0
	P	0.035	≤0.035	≤0.035	≤0.03	≤0.04	≤0.04	≤0.045	≤0.045	≤0.045	≤0.045	≤0.045	≤0.045
	S	≤0.04	≤0.04	≤0.04	≤0.03	≤0.04	≤0.04	≤0.03	≤0.03	≤0.03	≤0.03	≤0.03	≤0.03
	Cr	≤0.30	≤0.3	≤0.3	4.0～6.0	1.0～1.5	2.0～2.5	18.0～20.0	16.0~18.0	18.0~20.0	16.0～18.0	17.0~19.0	17.0～20.0
	Ni	≤0.4	≤0.4	3.3～3.7	≤0.5	–	–	8.0～11.0	10.0～14.0	8.0～13.0	10.0～15.0	9.0～12.0	9.0～13.0
	Mo	≤0.12	≤0.12	≤0.12	0.44～0.65	0.44～0.65	0.87～1.13	–	2.0–3.0	–	2.0～3.0	–	–
	Cu	≤0.4	≤0.4	≤0.4	–	–	–	–	–	–	–	–	–
	V	≤0.08	≤0.08	≤0.03	–	–	0.15~0.3	–	–	–	–	–	–
	Nb	≤0.02	≤0.02	≤0.02	–	–	–	–	–	–	–	–	–
机械性能 Mechanical capacity	σb(MPa)	≥485	≥485	≥485	≥485	≥485	≥515	≥515	≥515	≥485	≥485	≥515	≥515
	σs(MPa)	≥250	≥250	≥275	≥275	≥275	≥310	≥205	≥205	≥170	≥170	≥205	≥205
	σ%	≥22	≥22	≥25	≥20	≥20	≥20	≥30	≥30	≥30	≥30	≥30	≥30
	Ψ%	≥30	≥30	≥50	≥35	≥30	≥30	≥50	≥50	≥50	≥50	≥50	≥50
	HB	≤187	≤197	≤197	143～217	143～207	156～207	–	–	–	–	–	–
适用温度 Suitable temprature		–29~425℃	–46~350℃	–101~46℃	≤550℃	≤540℃	≤570℃	–253~730℃(按不同介质而定) (depend on different medium)					

主要材质化学成分和机械性能/Material chemical analysis and mechanical capacity

材料种类 Material type								Inconel					
		F317	F317L	F310H	F9	F91	F53	F51	F5a	Monel400	625	B62	Alloy 20
化学成分 % Chemical composition	C	≤0.08	≤0.03	0.04~0.10	≤0.15	0.08~0.12	≤0.030	≤0.030	≤0.25	≤0.3	≤0.1		≤0.01
	Si	≤1.0	≤1.0	≤1.0	0.50~1.00	0.20~0.50	≤0.8	≤1.00	≤0.50	≤0.5	≤0.5	≤0.005	≤0.05
	Mn	≤2.00	≤2.0	≤2.0	0.30～0.60	0.30～0.60	≤1.20	≤2.00	≤0.60	≤2.0	≤0.5		≤0.04
	P	≤0.045	≤0.045	≤0.045	≤0.03	≤0.020	≤0.035	≤0.03	≤0.040		≤0.015	≤0.05	≤0.005
	S	≤0.03	≤0.03	≤0.03	≤0.03	≤0.010	≤0.020	≤0.02	≤0.030	≤0.024	≤0.015	≤0.08	≤0.005
	Cr	18.0~20.0	18.0~20.0	24.0~26.0	8.00～10.0	8.0~9.5	24.0～26.0	21.0～23.0	4.0~6.0		20～23		≤0.25
	Ni	11.0~15.0	11.0~15.0	19.0~22.0		≤0.4	6.0～8.0	4.5～6.5	≤0.50	≥63	≥58	≤1.0	≤0.30
	Mo	3.0~4.0	3.0~4.0		0.90～1.10	0.85～1.05	3.0～5.0	2.5～3.5	0.44~0.65		8～10		≤0.10
	Cu						≤0.5	(N)0.08~0.20		28~34	≤0.5	84.0~86.0	(Co) 0.05
	V						(N)0.24~0.32			(Fe) 2.5	(Fe) 5 (Al) 0.4 (Ti) 0.4	(Sn)4.0~6.0	
	Nb										3.15~4.15	(Pb)64.0~6.0 (Zn)4.0~6.0	
机械性能 Mechanical capacity	σb(MPa)	≥515	≥515	≥515	≥585	≥620	≥800	≥620	≥620	≥483	≥827	≥205	≥620
	σs(MPa)	≥205	≥205	≥205	≥380	≥415	≥550	≥450	≥450	≥172	≥414	≥95	≥300
	σ%	≥30	≥30	≥30	≥20	≥20	≥15	≥15	≥22	≥35	≥30	≥20	≥40
	Ψ%	≥50	≥50	≥50	≥40	≥40			50				
	HB				179～217	190～248	310max		187~248				
适用温度 Suitable temprature		–29~425℃ –253~730℃			–29℃ ~650℃	–29℃ ~650℃		≤550℃	≤550℃	–240℃ ~480℃	–253℃ ~860℃	–253℃ ~230℃	–29℃ ~860℃

Class 150/300/600/800温度压力等级(Psig)

材料	A105&A350-LF2				F5				F11				F22				F304F 304H				F316 F316H				F304L F316L			
Class	150	300	600	800	150	300	600	800	150	300	600	800	150	300	600	800	150	300	600	800	150	300	600	800	150	300	600	800
-20 to 100	285	740	1480	1975	290	750	1500	2000	290	750	1500	2000	290	750	1500	2000	275	720	1440	1920	275	720	1440	1920	230	600	1200	1600
200	260	675	1350	1800	260	745	1490	2000	260	750	1500	1900	260	750	1500	1910	230	600	1200	1600	235	620	1240	1655	195	505	1015	1350
300	230	655	1315	1750	230	715	1430	1940	230	720	1445	1795	230	730	1455	1802	205	540	1080	1410	215	560	1120	1495	175	455	910	1210
400	200	635	1270	1690	200	705	1410	1880	200	695	1385	1755	200	705	1410	1730	190	495	995	1255	195	515	1025	1370	160	415	825	1100
500	170	600	1200	1595	170	665	1330	1775	170	665	1330	1710	170	665	1330	1705	170	465	930	1165	170	480	955	1275	145	380	765	1020
600	140	550	1095	1460	140	605	1210	1615	140	605	1210	1615	140	605	1210	1615	140	435	875	1105	140	450	900	1205	140	360	720	960
650	125	535	1075	1430	125	590	1175	1570	125	590	1175	1570	125	590	1175	1570	125	430	860	1090	125	445	890	1185	125	350	700	935
700	110	535	1065	1420	110	570	1135	1515	110	570	1135	1515	110	570	1135	1515	110	425	850	1075	110	430	870	1150	110	345	685	915
750	95	505	1010	1345	95	530	1055	1420	95	530	1065	1420	95	530	1065	1420	950	415	830	1060	95	425	855	1130	95	335	670	895
800	80	410	825	1100	80	510	1015	1325	80	510	1015	1355	80	510	1015	1355	80	105	802	1050	80	420	845	1105	80	330	660	875
850	65	270	535	715	65	485	965	1170	65	485	975	1300	65	485	975	1300	65	395	790	1035	65	415	835	1080	65	320	645	860
900	50	170	345	460	50	370	740	940	50	450	900	1200	50	450	900	1200	50	390	780	1025	550	385	830	1050				
950					35	275	550	695	35	320	640	1005	35	375	755	1005	35	380	765	1000	35	350	775	1030				
1000					20	200	400	510	20	215	430	595	20	260	520	715	20	320	640	860	20	345	700	970				
1050						145	290	375		145	290	365		175	350	530		310	615	825		305	685	880				
1100						100	200	275		95	190	225		110	220	300		255	515	685		235	610	735				
1150						60	125	185		60	125	140		70	135	275		200	400	520		185	475	550				
1200						35	70	120		40	75	95		40	80	145		155	310	415		145	370	485				
1250																		115	225	295		115	295	365				
1300																		85	170	220			235					

Class 900/1500/2500温度压力等级(Psig)

材料	A105&A350-LF2			F5			F11			F22			F304F 304H			F316 F316H			F304L F316L		
Class	900	1500	2500	900	1500	2500	900	1500	2500	900	1500	2500	900	1500	2500	900	1500	2500	900	1500	2500
-20 to 100	2200	3705	6170	2250	3750	6250	2250	3750	6250	2250	2750	6250	2160	3600	6000	2160	3600	6000	1800	3000	5000
200	2025	3375	5625	2235	3725	6205	2250	3750	6250	2250	2750	6250	1800	3000	5000	1860	3095	5160	1520	2530	4220
300	1970	3280	5470	2150	3580	5965	2165	3610	6015	2185	2640	6070	1620	2700	4500	1680	2795	4660	1360	2270	3780
400	1900	3170	5270	2115	3530	5880	2080	3465	5775	2115	2530	5880	1490	2485	4140	1540	2570	4280	1240	2065	3440
500	1765	2995	4990	1995	3325	5540	1995	3325	5540	1995	3325	5540	1395	2330	3880	1435	2390	3980	1145	1910	3180
600	1640	2735	4560	1815	3025	5040	1815	3025	5040	1815	3025	5040	1310	2185	3640	1355	2255	3760	1080	1800	3000
650	1610	2685	4475	1765	2940	4905	1765	2940	4905	1765	2940	4905	1290	2150	3580	1330	2220	3700	1050	1750	2920
700	1600	2665	4440	1705	2840	4730	1705	2840	4730	1705	2840	4730	1275	2125	3540	1305	2170	3620	1030	1715	2860
750	1510	2520	4200	1585	2640	4400	1595	2660	4430	1595	2660	4430	1245	2075	3460	1280	2135	3560	1010	1680	2800
800	1235	2060	3430	1525	2540	4230	1525	2540	4230	1525	2540	4230	1210	2015	3360	1265	2110	3520	985	1645	2740
850	805	1340	2230	1450	2415	4030	1460	2435	4060	1460	2435	4060	1190	1980	3300	1255	2090	3480	950	1610	2680
900	515	860	1430	1110	1850	3085	1350	2245	3745	1350	2245	3745	1165	1945	3240	1245	2075	3460			
950				825	1370	2285	9550	1595	2655	1130	1885	3145	1145	1910	3180	1160	1930	3220			
1000				595	995	1665	650	1080	1800	780	1305	2170	965	1605	2675	1050	1750	2915			
1050				430	720	1200	430	720	1200	525	875	1455	925	1545	2570	1030	1720	2865			
1100				300	495	830	290	480	800	330	550	945	770	1285	2145	915	1525	2545			
1150				185	310	515	185	310	515	205	345	570	595	995	1655	710	1185	1970			
1200				105	170	285	115	190	315	125	205	345	465	770	1285	555	925	1545			
1250													340	565	945	440	735	1230			
1300													255	430	715	350	585	970			