API CAST STEEL GATE VALVE STRUCTURE DIAGRAM

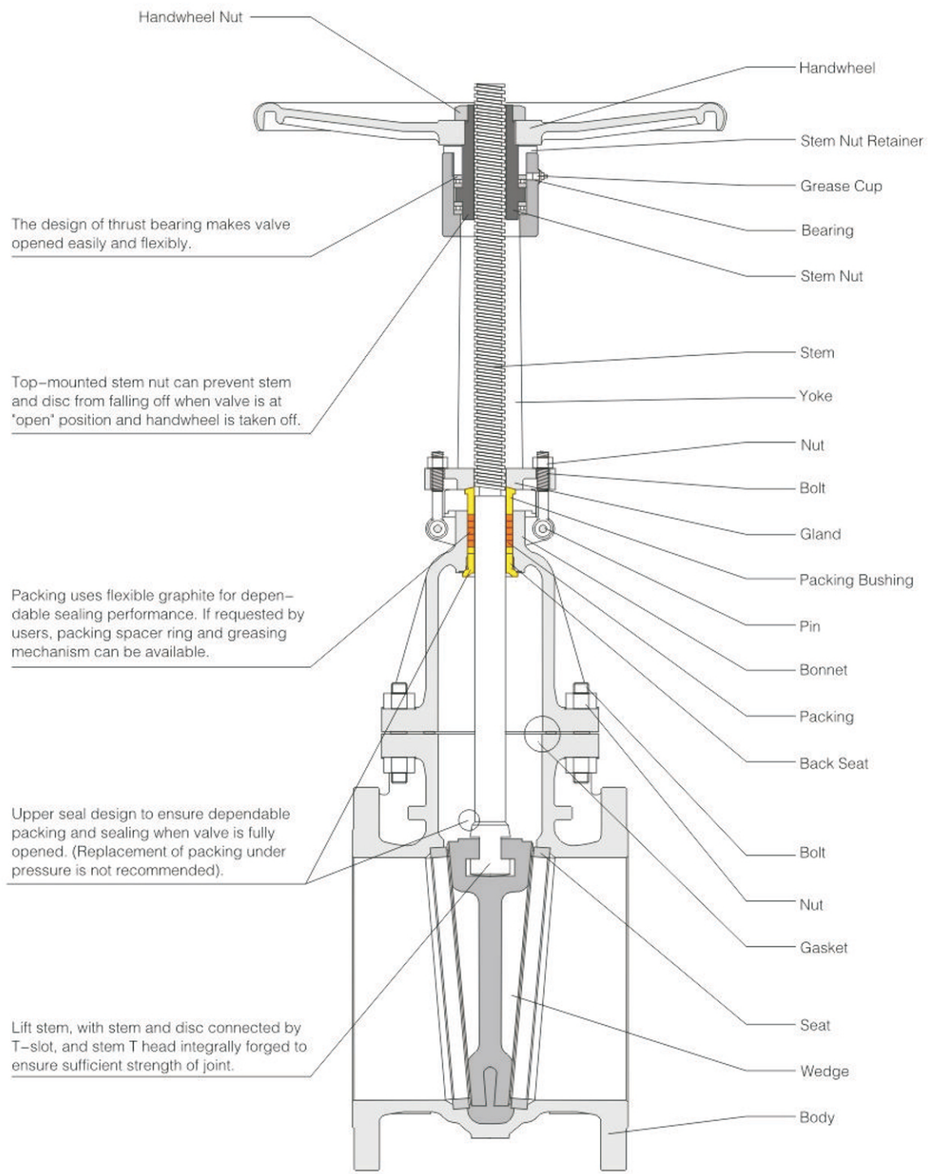

The material list of API cast steel gate valve (ASTM standard materials)

NO.	Part Name	Carbon Steel	Stainless Steel	Alloy Steel	Low Temperature Steel
1	Body	ASTM A216 GR WCB	ASTM A351 GR CF8	ASTM A217 GR WC6	ASTM A352 GR LCB
2	Disc	ASTM A216 GR WCB	ASTM A351 GR CF8	ASTM A217 GR WC6	ASTM A352 GR LCB
3	Seat	ASTM A105	–	ASTM A182 GR F304	ASTM 350 LF2
4	Gasket	Graphite +SS304			
5	Nut	ASTM A194 GR 2H	ASTM A194 GR 8	ASTM A194 GR 4	ASTM A194 GR 4
6	Stud	ASTM A193 GR B7	ASTM A193 GR B8	ASTM A193 GR B16	ASTM A320 L7
7	Back Seat	ASTM A276 410	ASTM A276 TYPE 304	ASTM A276 TYPE 304	ASTM A276 304
8	Packing	Graphite			
9	Bonnet	ASTM A216 GR WCB	ASTM A351 GR CF8	ASTM A217 GR WC6	ASTM A352 GR LCB
10	Pin	ASTM A194 GR 2H	ASTM A276 TYPE 304	ASTM A276 TYPE 410	ASTM A276 TYPE 304
11	Packing Bushing	ASTM A276 410	ASTM A276 TYPE 304	ASTM A276 410	ASTM A276 304
12	Gland	ASTM A216 GR WCB	ASTM A351 GR CF8	ASTM A216 GR WC6	ASTM A352 GR LCB
13	Bolt	ASTM A193 GR B7	ASTM A193 GR B8	ASTM A193 GR B16	ASTM A320 L7
14	Nut	ASTM A194 GR 2H	ASTM A193 GR 8	ASTM A193 GR 4	ASTM A194 GR 4
15	Yoke	ASTM A216 GR WCB	ASTM A351 GR CF8	ASTM A217 GR WC6	ASTM A352 GR LCB
16	Stem	ASTM A276 TYPE 420	ASTM A276 TYPE 304	ASTM A182 GR F11	ASTM A276 TYPE 304
17	Stem Nut	ASTM B148 UNS C95200	ASTM B148 UNS C95200	ASTM B148 UNS C95200	ASTM B148 UNS C95200
18	Bearing	–			
19	Grease cup	Copper Alloy			
20	Stem Nut Retainer	ASTM 1035	ASTM 1035	ASTM 1035	ASTM 1035
21	Handwheel	ASTM 32510	ASTM 32510	ASTM 32510	ASTM 32510
22	Handwheel Nut	ASTM 1035	ASTM 1035	ASTM 1035	ASTM 1035

Technical Specification

Design Standard		API600 API603						
Pressure-Temperature Rating		ASME B16.34						
Face to Face		ASME B16.10						
Flange Ends		ASME B16.5、ASME B16.47						
Buttwelding Ends		ASME B16.25						
Inspection & Test		API598						
Norminal Pressure (Class)		150	300	400	600	900	1500	2500
Test Pressure (MPa)	Shell Test	3.0	7.5	10.3	15.0	22.5	37.5	63.0
	High Pressure Seal Test	2.2	5.5	7.5	11.0	16.5	27.5	46.2
	Upper Pressure Seal Test	2.2	5.5	7.5	11.0	16.5	27.5	46.2
	Low Pressure Seal Test	0.6						
Applicable Temperature		-196℃ ~ 550℃ Different raw material for different work temperature						
Applicable Medium		Water, oil, gas and sother causticity medium (Different raw material for different medium)						

API Cast steel Gate valve Product Line

Size (mm)		Bolted Bonnet									Prsssure Seal Bonnet							
		Handwheel					Gear operated				Hand operated				Gear operated			
DN	NPS	150	300	600	900	1500	300	600	900	1500	600	900	1500	2500	600	900	1500	2500
40	1 1/2	*	*	*	*	*												
50	2	*	*	*	*	*												
65	2 1/2	*	*	*	*	*												
80	3	*	*	*	*	*					*	*	*	*				
100	4	*	*	*	*	*					*	*	*	*				
125	5	*	*	*	*	*					*	*	*	*				
150	6	*	*	*	*	*					*	*	*	*				
200	8	*	*	*	*	*					*	*	*					*
250	10	*	*	*	*						*	*	*					*
300	12	*	*	*	*					*	*	*					*	*
350	14	*	*	*	*					*	*	*					*	*
400	16	*	*	*					*	*	*					*	*	*
450	18	*	*	*					*	*	*					*	*	*
500	20	*	*	*					*	*	*					*	*	*
600	24	*	*					*	*	*					*	*	*	*
650	26	*	*					*							*	*	*	*
700	28	*	*					*							*	*	*	*
750	30	*	*					*							*	*	*	*
800	32	*	*					*							*	*	*	*
900	36	*	*					*							*	*	*	*
1000	40	*					*	*										
1050	42	*					*	*										
1200	48	*					*	*										

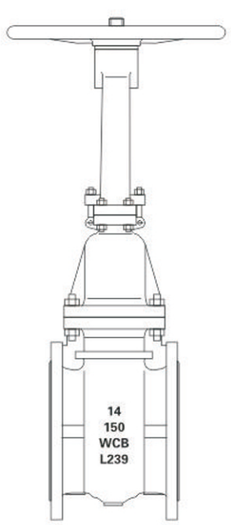

Handwheel operatred

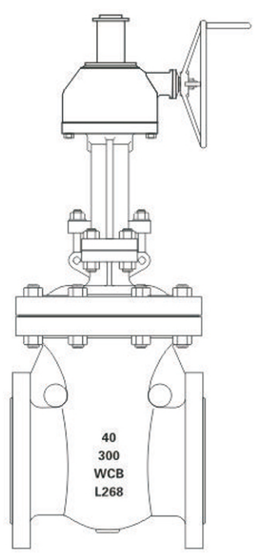

Gear Operated

Presssure: Class150

- Bolted bonnet
- Flexible wedge gate
- 8" and above: split type yoke

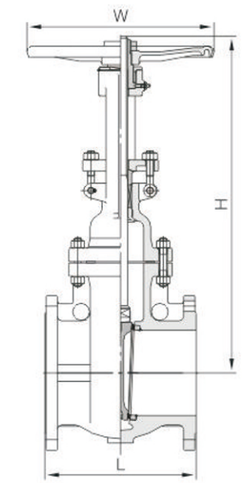

Main Dimensions & Weight

Size		Dimension (mm)					Weight (kg)		Torque (N.m)	Cv
mm	in	L_{RF}	L_{BW}	L_{RJ}	H	W	RF	BW		
40	1 1/2	165	165	178	386	250	24	21	12	–
50	2	178	216	190	391	250	27	23	13	–
65	2 1/2	190	241	203	408	250	37	33	13	–
80	3	203	283	216	457	250	40	35	15	710
100	4	229	305	241	538	250	52	47	27	1300
150	6	267	403	279	693	350	90	84	36	3100
200	8	292	419	305	863	350	145	137	63	5720
250	10	330	457	343	1036	450	225	207	84	8940
300	12	356	502	368	1130	450	310	253	131	13350
350	14	381	572	394	1272	610	445	376	151	16275
400	16	406	610	419	1447	610	540	440	235	21560
450	18	432	660	445	1701	720	800	722	285	28720
500	20	457	711	470	1795	720	990	863	341	35760
600	24	508	813	521	2189	720	1600	1519	602	52165
650	26	559	864	–	2387	860	1850	1755	–	63500
700	28	610	914	–	2590	860	2100	1995	–	74800
750	30	610	914	622	2819	860	2700	2404	1079	86235
800	32	711	965	–	2870	860	3100	2840	–	103000
900	36	711	1016	724	2997	860	3950	3690	1497	129500
1000	40	813	1067	–	3302	1020	4650	–	–	175860
1050	42	813	1143	–	3479	1020	5100	–	–	223300
1200	48	1067	1371	–	3962	1020	6500	–	–	335500

Presssure: Class300

- Bolted bonnet
- Flexible wedge gate
- 8" and above: split type yoke
  24" and above: Gear operated

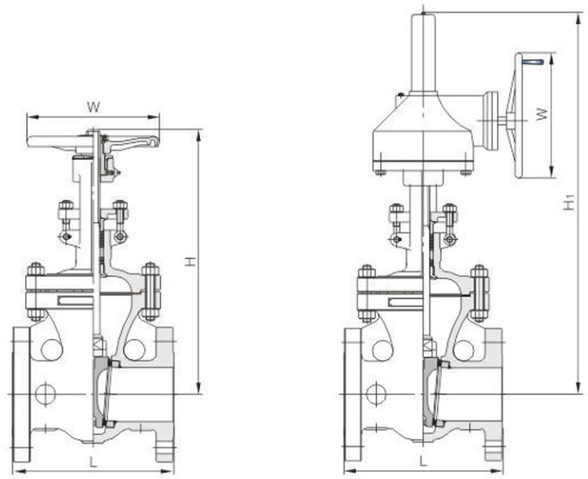

Main Dimensions & Weight

Size		Dimension (mm)						Weight (kg)		Torque (N.m)	Cv
mm	in	L_{RF}	L_{BW}	L_{RJ}	H	H_1	W	RF	BW		
40	1½	190	190	203	425	–	250	30	28	15	–
50	2	216	216	232	467	–	250	32	29	16	–
65	2½	241	241	257	495	–	250	49	43	18	–
80	3	283	283	299	520	–	250	52	49	21	710
100	4	305	305	321	609	–	350	85	77	42	1300
150	6	403	403	419	825	–	450	150	145	86	3110
200	8	419	419	435	1009	–	450	240	227	128	5720
250	10	457	457	473	1193	–	610	380	337	215	8940
300	12	502	502	518	1282	–	610	486	430	289	13350
350	14	762	762	778	1422	–	610	729	654	423	16275
400	16	838	838	854	1549	–	720	931	876	537	21560
450	18	914	914	930	1803	–	720	1504	1300	649	27890
500	20	991	991	1010	1955	–	720	1938	1625	1009	34840
600	24	1143	1143	1165	2425	–	860	3411	2800	1451	51050
650	26	1245	1245	1270	2540	–	860	3570	3100	–	62011
700	28	1346	1346	1372	2641	–	860	4027	3600	–	73046
750	30	1397	1397	1422	2743	–	860	4310	3780	3140	84765
800	32	1524	1524	1553	2857	–	860	4850	4235	–	100580
900	36	1727	1727	1756	3048	–	860	6632	5900	4293	125825
1000	40	1955	1955	–	–	3713	720	8100	–	–	171740
1050	42	2032	2032	–	–	3916	720	9750	–	–	217000
1200	48	2286	2286	–	–	4501	720	13050	–	–	326000

Presssure: Class600

- Bolted bonnet
- Flexible wedge gate
- 8" and above: split type yoke
  24" and above: Gear operated

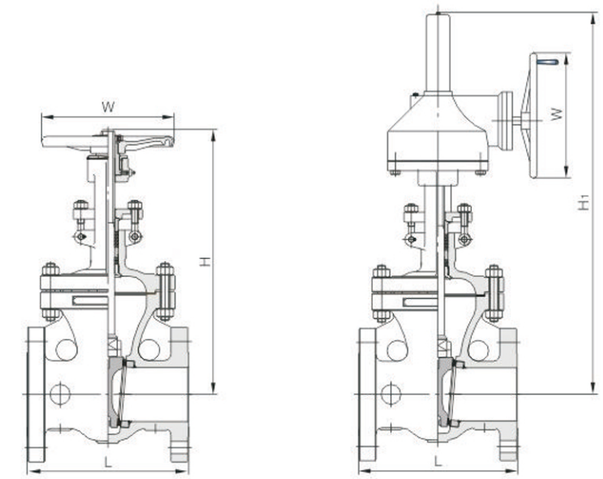

Main Dimensions & Weight

Size		Dimension (mm)						Weight (kg)		Torque (N.m)	Cv
mm	in	L_{RF}	L_{BW}	L_{RJ}	H	H_1	W	RF	BW		
40	1½	241	241	241	375	–	250	41	28	20	–
50	2	292	292	295	387	–	250	50	39	23	–
65	2½	330	330	333	483	–	250	54	53	–	–
80	3	356	356	359	537	–	350	85	67	50	710
100	4	432	432	435	647	–	350	126	101	68	1300
150	6	559	559	562	914	–	610	274	230	183	3110
200	8	660	660	664	1092	–	610	454	390	270	5500
250	10	787	787	791	1181	–	720	628	566	479	8485
300	12	838	838	841	1333	–	720	895	823	650	12850
350	14	889	889	892	1473	–	720	1350	1198	988	15370
400	16	991	991	994	1651	–	860	1700	1532	1243	20170
450	18	1092	1092	1095	1727	–	860	2140	1996	1512	26200
500	20	1194	1194	1200	2019	–	860	2683	2450	2185	32100
600	24	1397	1397	1407	–	2383	610	4550	3244	3053	46750
650	26	1448	1448	1461	–	2500	610	5260	–	–	56300
700	28	1549	1549	1562	–	2663	610	5960	–	–	65900
750	30	1651	1651	1664	–	2840	610	6700	6160	5452	75520
800	32	1778	1778	1794	–	3100	720	8312	–	–	85180
900	36	2083	2083	2099	–	3450	720	10125	9580	7675	114250
1000	40	2149	2149	–	–	3600	720	14300	–	–	156127
1050	42	2260	2260	–	–	3950	720	16460	–	–	197272
1200	48	2667	2667	–	–	4600	720	22900	–	–	296300

Presssure: Class900 ~ 1500

- Bolted bonnet
- Flexible wedge gate
- 8" and above: split type yoke
- Class900, 16" and above;
  Class1500, 12" and above;
  Gear operated

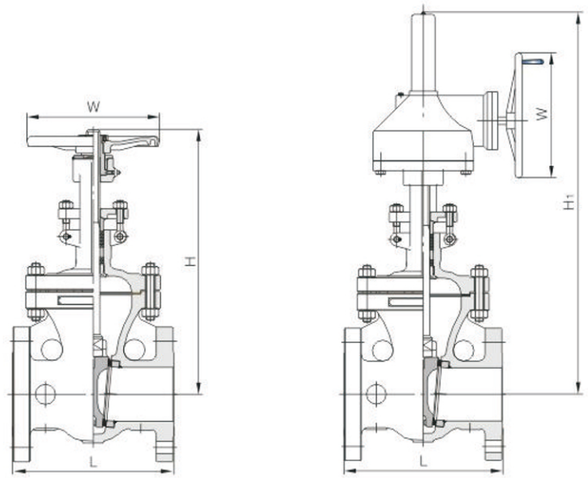

Main Dimensions & Weight

Class	Size		Dimension (mm)						Weight (kg)		Torque (N.m)	Cv
	mm	in	L_{RF}	L_{BW}	L_{RJ}	H	H_1	W	RF	BW		
900	40	1½	305	305	305	495	–	250	62	45	24	–
	50	2	368	368	371	523	–	250	116	98	39	–
	65	2½	419	419	422	577	–	350	161	130	56	–
	80	3	381	381	384	609	–	350	142	136	64	650
	100	4	457	457	460	673	–	350	214	180	118	1200
	150	6	610	610	613	863	–	610	408	405	243	2850
	200	8	737	737	740	1079	–	610	731	644	427	5025
	250	10	838	838	841	1231	–	720	1151	1010	783	7850
	300	12	965	965	968	1384	–	720	1724	1455	1163	11500
	350	14	1029	1029	1038	1574	–	850	2060	1807	1331	13900
	400	16	1130	1130	1140	–	2159	760	2400	–	–	18150
	450	18	1219	1219	1232	–	2362	760	3000	–	–	23910
	500	20	1321	1321	1334	–	2463	760	3800	–	–	29550
	600	24	1549	1549	1568	–	3048	900	4900	–	–	42570
1500	40	1½	305	305	305	495	–	250	62	45	32	–
	50	2	368	368	371	582	–	250	116	98	54	–
	65	2½	419	419	422	635	–	350	161	130	76	–
	80	3	470	470	473	781	–	350	209	193	108	600
	100	4	546	546	549	876	–	450	296	250	167	1070
	150	6	705	705	711	1104	–	610	720	652	426	2500
	200	8	832	832	841	1142	–	720	1275	1134	801	4370
	250	10	991	991	1000	1784	–	860	2092	1765	1268	6850
	300	12	1130	1130	1146	–	1955	760	2951	2386	2078	9980
	350	14	1257	1257	1276	–	2057	760	4382	3759	2392	12000
	400	16	1384	1384	1407	–	2311	760	5043	–	–	15675
	450	18	1537	1537	1559	–	2438	860	5705	–	–	20640
	500	20	1664	1664	1686	–	2590	860	6750	–	–	25880
	600	24	1943	1943	1972	–	2946	860	9500	–	–	37175

Presssure: Class600 ~ 900

- Pressure sealed bonnet
- Flexible wedge gate
- Class600, 24" and above;
  Class900, 16" and above:
  Gear operated

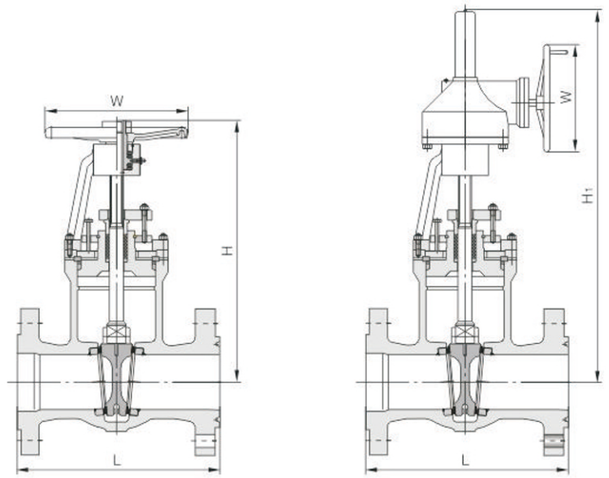

Main Dimensions & Weight

Class	Size		Dimension (mm)						Weight (kg)		Torque (N.m)	Cv
	mm	in	L_{RF}	L_{BW}	L_{RJ}	H	H_1	W	RF	BW		
600	80	3	356	254	359	609	–	250	68	54	29	710
	100	4	432	305	435	762	–	350	112	84	50	1300
	150	6	559	457	562	863	–	450	209	169	129	3110
	200	8	660	584	664	1092	–	610	315	245	232	5500
	250	10	787	711	791	1168	–	720	529	429	379	8485
	300	12	838	812	841	1270	–	720	775	615	550	12850
	350	14	889	889	892	1447	–	720	1210	960	–	15370
	400	16	991	991	994	1651	–	860	1600	1200	–	20170
	450	18	1092	1092	1095	1727	–	860	1895	1435	–	26200
	500	20	1194	1194	1200	1981	–	860	2356	1794	–	32100
	600	24	1397	1397	1407	–	2308	610	4300	3600	–	46750
	650	26	1448	1448	1461	–	2500	610	4800	4070	–	56300
	700	28	1549	1549	1562	–	2750	610	5600	4770	–	65900
	750	30	1651	1651	1664	–	2840	610	6350	5410	–	75520
	800	32	1778	1778	1794	–	3150	720	7890	6840	–	85180
	900	36	2083	2083	2099	–	3400	720	9112	7802	–	114250
900	80	3	381	305	384	584	–	350	95	77	40	450
	100	4	457	356	460	711	–	350	130	101	71	850
	150	6	610	508	613	863	–	610	280	245	174	1925
	200	8	737	660	740	1016	–	610	460	341	319	3575
	250	10	838	787	841	1181	–	720	820	640	530	5250
	300	12	965	914	968	1320	–	720	1150	930	740	7550
	350	14	1029	991	1038	1568	–	850	1500	1298	1008	9150
	400	16	1130	1092	1140	–	2159	760	2100	1855	1400	11950
	450	18	1219	1219	1232	–	2381	760	2750	2340	1696	15575
	500	20	1321	1321	1334	–	2451	760	3400	2800	2302	27675
	600	24	1549	1549	1568	–	2971	900	4400	3420	4224	–
	650	26	1574	1574	–	–	3352	900	5500	4270	–	–
	700	28	1663	1663	–	–	3695	900	6900	5454	–	–
	750	30	1778	1778	–	–	4000	900	9000	7392	–	–
	800	32	1854	1854	–	–	4165	900	11000	9042	–	–
	900	36	2032	2032	–	–	4597	900	13500	10874	–	–

Presssure: Class1500 ~ 2500

- Pressure sealed bonnet
- Flexible wedge gate
- Class1500, 12" and above;
  Class2500, 8" and above:
  Gear operated

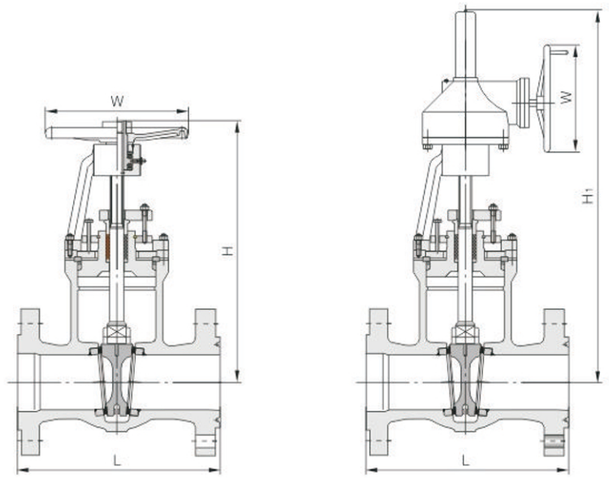

Main Dimensions & Weight

Class	Size		Dimension (mm)						Weight (kg)		Torque (N.m)	Cv
	mm	in	L_{RF}	L_{BW}	L_{RJ}	H	H_1	W	RF	BW		
1500	80	3	470	305	473	660	–	350	148	110	69	415
	100	4	546	406	549	736	–	450	236	180	111	730
	150	6	705	559	711	914	–	610	481	370	307	1675
	200	8	832	771	841	1244	–	720	810	610	537	2925
	250	10	991	864	1000	1485	–	860	1680	1300	948	4550
	300	12	1130	991	1146	–	1905	760	2565	2000	1409	6570
	350	14	1257	1067	1276	–	1981	760	3260	2900	1823	7890
	400	16	1384	1194	1407	–	2108	760	4540	3490	2516	10325
	450	18	1537	1346	1559	–	2209	860	5225	4000	3767	13425
	500	20	1664	1473	1686	–	2387	860	6310	4800	5283	16820
	600	24	1943	1943	1972	–	2794	860	9050	7500	8228	24150
	650	26	2033	2033	–	–	3098	1020	9934	8900	–	–
	700	28	2209	2209	–	–	3403	1020	11174	10000	–	–
	750	30	2286	2286	–	–	3746	1020	14852	13500	–	–
	800	32	2413	2413	–	–	3048	–	17443	16000	–	–
	900	36	2565	2565	–	–	3251	–	21246	18900	–	–
2500	80	3	–	368	–	596	–	450	–	135	110	275
	100	4	–	457	–	698	–	610	–	215	194	460
	150	6	–	610	–	876	–	610	–	550	381	1100
	200	8	–	762	–	–	1043	610	–	900	727	1970
	250	10	–	914	–	–	1170	860	–	1600	1398	3130
	300	12	–	1041	–	–	1322	860	–	2300	1980	4535
	350	14	–	1118	–	–	1379	1020	–	3200	2593	5500
	400	16	–	1245	–	–	1481	1020	–	4100	3952	7210
	450	18	–	1397	–	–	1651	1020	–	5200	5735	9415
	500	20	–	1397	–	–	1811	1020	–	6800	7804	11450
	600	24	–	1625	–	–	1905	–	–	9500	11798	16575
	650	26	–	1778	–	–	2032	–	–	11000	–	–
	700	28	–	1905	–	–	2108	–	–	13100	–	–
	750	30	–	2032	–	–	2362	–	–	17200	–	–
	800	32	–	2184	–	–	2463	–	–	19300	–	–
	900	36	–	2413	–	–	3063	–	–	25000	–	–

The structure drawing of ANSI cast steel globe valve (OS & Y)

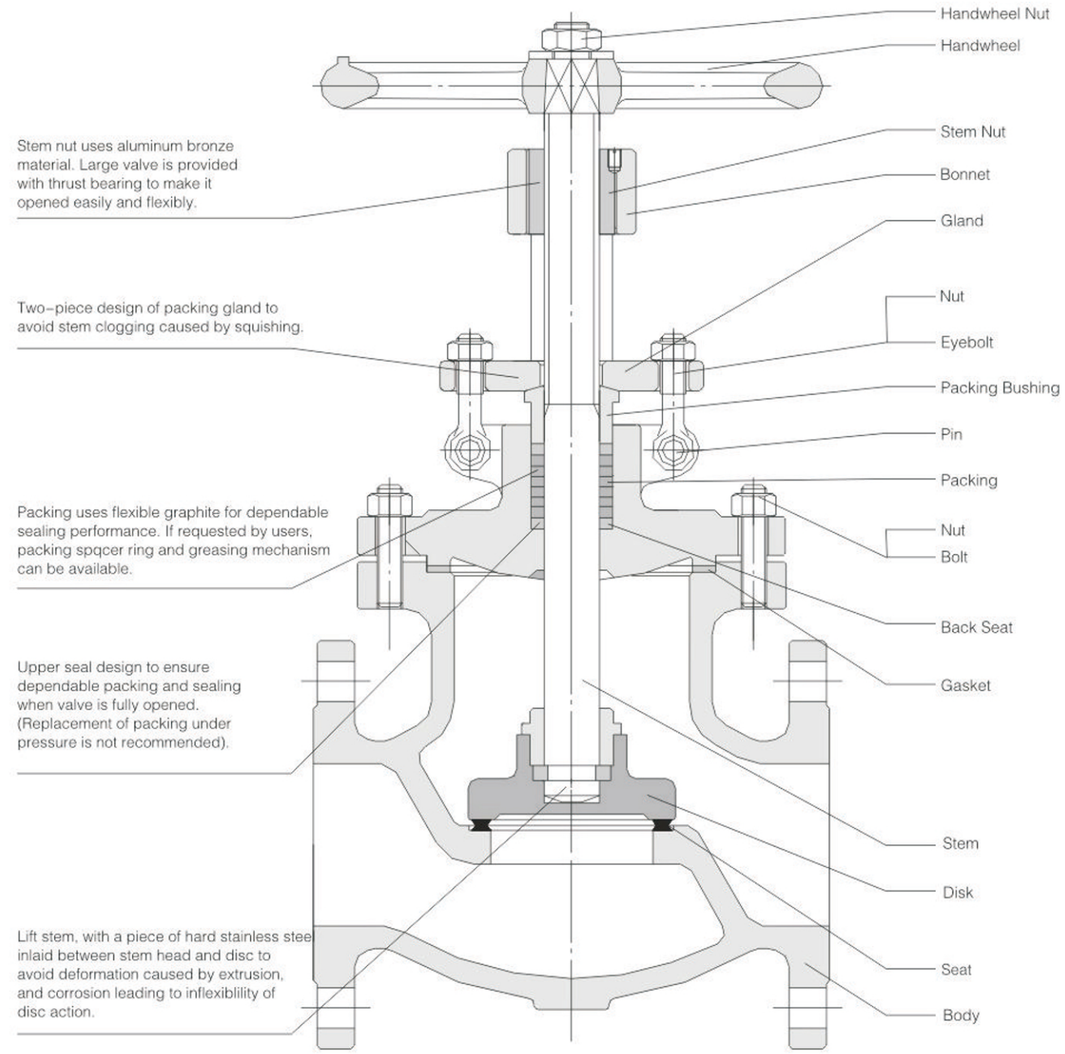

The material list of ANSI cast steel globe valve (standard material)

No.	Part Name	Carbon Steel	Stainless Steel	Alloy Steel	Low Temperature Steel
1	Body	A216 GR WCB	A351 GR CF8	A217 GR WC6	A352 GR LCB
2	Seat	A105	–	A182 GR F304	A182 GR F304
3	Disk	A216 GR WCB	A351 GR CF8	A217 GR WC6	A352 GR LCB
4	Stem	A276 TYPE 410	A276 TYPE 304	A182 GR F22	A276 TYPE 304
5	Stud	A193 GR B7	A193 GR B8	A193 GR B16	A320 GR L7
6	Nut	A194 GR 2H	A194 GR 8	A194 GR 4	A194 GR 4
7	Back Seat	A182 GR F6a	A182 GR F304	A182 GR F304	A182 GR F304
8	Gasket	Graphite +SS304			
9	Packing	Graphite			
10	Pin	A194 GR 2H	A276 TYPE 304	A276 TYPE 410	A276 TYPE 304
11	Packing Bushing	A182 GR F6a	A182 GR F304	A182 GR F304	A182 GR F304
12	Eyebolt	A193 GR B7	A193 GR B8	A193 GR B16	A320 GR L7
13	Eyebolt Nut	A194 GR 2H	A194 GR 8	A194 GR 4	A194 GR 4
14	Gland	A216 GR WCB	A351 GR CF8	A216 GR WCB	A352 GR LCB
15	Bonnet	A216 GR WCB	A351 GR CF8	A216 GR WCB	A352 GR LCB
16	Stem Nut	B148 UNS C95200	B148 UNS C95200	B148 UNS C95200	B148 UNS C95200
17	Handwheel	A197	A197	A197	A197
18	Handwheel Nut	A108 GR 1020	A182 GR F304	A108 GR 1020	A108 GR F304

Technical Specification

Design Standard		BS1873 ASME B16.34					
Pressure–Temperature Rating		ASME B16.34					
Face to Face		ASME B16.10					
Flange Ends		ASME B16.5					
Buttwelding Ends		ASME B16.25					
Inspection & Test		API598					
Norminal Pressure (Class)		150	300	400	600	900	1500
Test pressure (MPa)	Shell Test	3	7.5	10.3	15.0	22.5	37.5
	High Pressure Seal Test	2.2	5.5	7.5	11.0	16.5	27.5
	Low Pressure Seal Test	0.6					
Applicable Temperature		–196℃ ~ 550℃ Different raw material for different work temperatuer					
Applicable Medium		Water, oil, gas and other causticity medium (Different raw material for different medium)					

ANSI cast steel globe valve product line

Size (mm)		Pressure (Class)															
		Bolted bonnet										Self–sealed bonnet					
DN	NPS	Handwheel					Gear operated					Handwheel			Gear operated		
		150	300	600	900	1500	150	300	600	900	1500	600	900	1500	600	900	1500
40	1½	*	*	*													
50	2	*	*	*													
65	2½	*	*	*													
80	3	*	*	*								*	*	*			
100	4	*	*	*	*	*						*	*	*			
150	6	*	*	*	*	*					*	*	*				
200	8	*	*	*	*				*	*	*	*					*
250	10	*	*						*							*	*
300	12	*	*												*		
350	14	*	*														
400	16	*						*									
450	18	*						*									
500	20	*						*									
600	24	*						*									

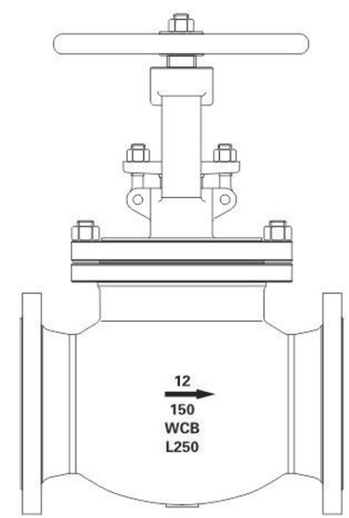

Handwheel operated

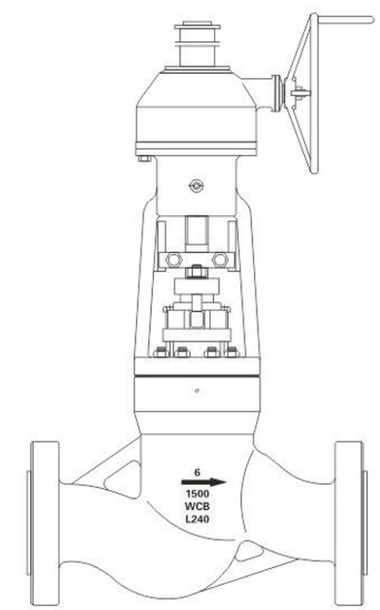

Gear operated

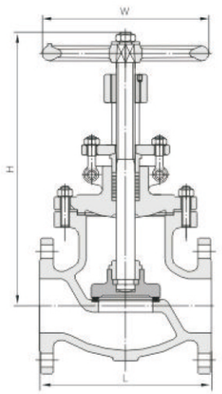

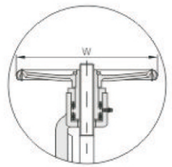

Bearing structure

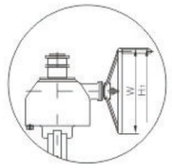

Gear operated

Pressure: Class150

- Bolted bonnet
- 14" and above with bearing structure

Pressure: Class300

- Bolted bonnet
- 10" and above with bearing structure
- 16" and above gear operated

Main Dimensions & Weight

Class	Size(mm)		Size (mm)						Weight (kg)		Torque (N.m)	Cv
	mm	in	L_{RF}	L_{BW}	L_{RJ}	H	H_1	W	RF	BW		
Class150	40	1 1/2	165	165	178	289	–	200	14	11	16	–
	50	2	203	203	216	343	–	200	23	19	19	–
	65	2 1/2	216	216	229	365	–	250	32	25	29	–
	80	3	241	241	254	375	–	250	38	31	45	100
	100	4	292	292	305	448	–	250	63	53	67	185
	150	6	406	406	419	584	–	350	108	90	129	440
	200	8	495	495	508	660	–	450	186	164	245	810
	250	10	622	622	635	683	–	450	271	239	385	1260
	300	12	698	698	711	794	–	610	374	326	601	1890
	350	14	787	787	800	889	–	610	610	–	649	2441
	400	16	914	914	927	–	977	720	880	–	–	3234
	450	18	977	977	–	–	1066	720	1150	–	–	4308
	500	20	977	977	–	–	1117	720	1650	–	–	5364
	600	24	1295	1295	–	–	1295	850	2200	–	–	7825
Class300	40	1 1/2	229	229	241	365	–	200	27	21	24	–
	50	2	267	267	283	435	–	200	36	30	30	–
	65	2 1/2	292	292	308	476	–	250	47	39	51	–
	80	3	318	318	333	479	–	250	62	50	84	100
	100	4	356	356	371	581	–	350	102	83	145	185
	150	6	444	444	460	657	–	450	176	146	319	440
	200	8	559	559	575	724	–	450	288	244	617	810
	250	10	622	622	638	800	–	860	571	505	1126	1260
	300	12	711	711	727	900	–	860	770	669	1988	1890
	350	14	838	838	–	1092	–	860	876	–	–	2441
	400	16	863	863	–	–	1371	610	1200	–	–	3234
	450	18	977	977	–	–	1473	610	1600	–	–	4183
	500	20	1016	1016	–	–	1574	720	2100	–	–	5226
	600	24	1346	1346	–	–	1803	720	3150	–	–	7657

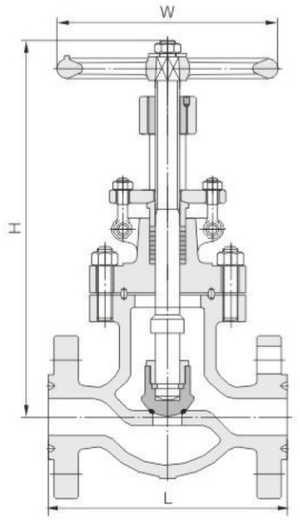

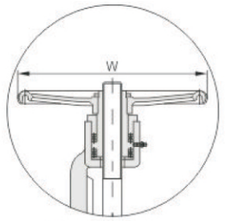

Bearing structure

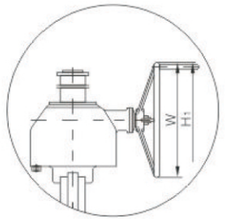

Gear operated

Pressure: Class600 ~ 1500

- Bolted bonnet
- 6" and above with bearing structure
- 8" and above gear operated

Main Dimensions & Weight

Class	Size(mm)		Size (mm)						Weight (kg)		Torque (N.m)	Cv
	mm	in	L_{RF}	L_{BW}	L_{RJ}	H	H_1	W	RF	BW		
Class600	40	1 1/2	241	241	241	425	–	200	34	32	30	–
	50	2	292	292	295	460	–	250	52	44	66	–
	65	2 1/2	330	330	333	505	–	250	63	53	103	–
	80	3	356	356	359	556	–	350	87	75	175	100
	100	4	432	432	435	670	–	450	144	123	332	185
	150	6	559	559	562	905	–	610	355	298	819	440
	200	8	660	660	664	1060	–	610	555	499	1208	780
	250	10	787	787	791	–	1219	610	875	793	2266	1200
	300	12	838	838	841	–	1570	610	1280	1134	4140	1350
Class900	80	3	381	381	384	635	–	350	150	120	–	90
	100	4	457	457	460	774	–	500	247	200	–	170
	150	6	610	610	613	1041	–	500	410	–	–	400
	200	8	737	737	740	1333	–	610	790	–	–	710
	250	10	838	838	841	–	1625	610	1400	–	5145	1100
Class1500	80	3	470	470	473	635	–	350	122	–	–	95
	100	4	546	546	549	736	–	450	172	–	–	170
	150	6	705	705	711	1092	–	610	510	–	–	395
	200	8	832	832	841	–	1482	500	875	–	–	695
	250	10	991	991	1000	–	1549	610	1675	–	8445	1085

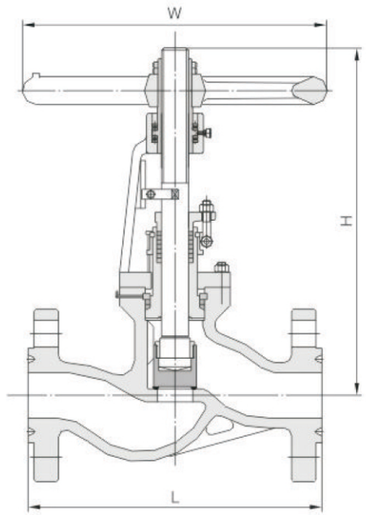

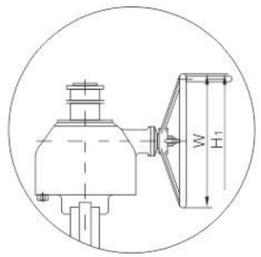

Gear operated

Pressure: Class600 ~ 900

- Pressure sealed bonnet
- Class600, 12" and above
- Class900, 10" and above
- Class1500, 8" and above

Main Dimensions & Weight

Class	Size(mm)		Size (mm)						Weight (kg)		Torque (N.m)	Cv
	mm	in	LRF	LBW	LRJ	H	H1	W	RF	BW		
Class600	80	3	356	254	359	508	–	350	80	–	175	100
	100	4	432	305	435	635	–	450	135	–	332	185
	150	6	559	457	562	876	–	610	275	–	819	440
	200	8	660	584	663	990	–	610	480	–	1208	780
	250	10	787	711	781	1168	–	610	780	–	2266	1200
	300	12	838	812	841	–	1570	610	1150	–	4140	1810
Class900	80	3	381	305	384	635	–	350	105	–	–	105
	100	4	457	356	460	774	–	500	170	–	–	195
	150	6	610	508	613	1065	–	500	370	–	–	455
	200	8	727	660	730	1333	–	610	720	–	–	800
	250	10	838	787	841	–	1574	610	1200	–	5145	1250
Class1500	80	3	470	470	473	635	–	350	–	95	–	95
	100	4	546	546	549	774	–	450	–	155	–	170
	150	6	705	705	711	1092	–	610	–	400	–	395
	200	8	832	832	841	–	1496	610	–	640	–	695
	250	10	991	991	1000	–	1549	610	–	1200	8445	1085

Pressure: Class150 ~ 600

- 栓接阀盖Bolted bonnet

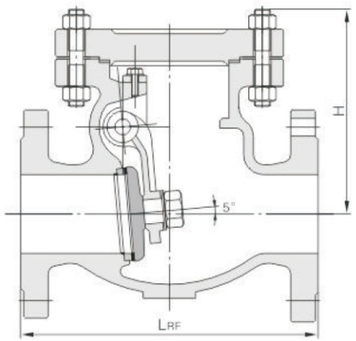

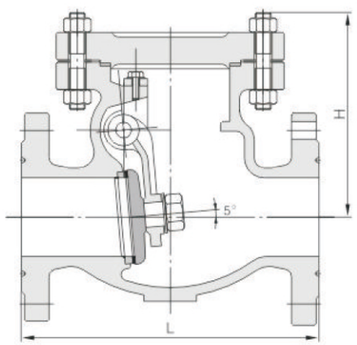

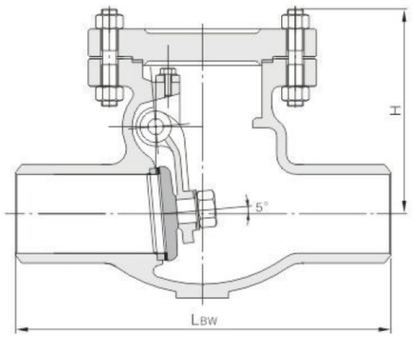

Main Dimensions & Weight

Pressure	Size		Dimension (mm)				Weight(kg)		Cv
	mm	in	LRF	LBW	LRTT	H	RF	BW	
Class 150	40	1 1/2	165	165	178	147	13	9	–
	50	2	203	203	216	151	17	12	–
	65	2 1/2	216	216	229	164	23	15	–
	80	3	241	241	254	178	29	19	285
	100	4	292	292	305	190	40	27	520
	150	6	356	356	368	228	78	56	1245
	200	8	495	495	508	292	140	104	2280
	250	10	622	622	635	304	215	178	3570
	300	12	699	699	711	342	295	220	5300
	350	14	787	787	800	406	408	308	6500
	400	16	864	864	876	508	533	413	8615
	450	18	978	978	991	584	670	530	11500
	500	20	978	978	991	622	1000	830	14300
	600	24	1295	1295	1308	711	1950	1710	20865
	650	26	1295	1295	–	762	2300	2035	25165
	700	28	1448	1448	–	838	2500	2190	29513
	750	30	1524	1524	–	889	2600	2244	33910
	800	32	1727	1727	–	1016	2800	2345	43130
	900	36	1955	1955	–	1092	3200	2613	61570
Class 300	40	1 1/2	241	241	254	155	17	11	–
	50	2	267	267	283	161	20	12	–
	65	2 1/2	292	292	308	175	24	15	–
	80	3	318	318	333	203	45	29	285
	100	4	356	356	371	228	65	41	515
	150	6	445	445	460	279	115	75	1245
	200	8	533	533	549	342	215	156	2285
	250	10	622	622	638	381	310	220	3575
	300	12	711	711	727	431	470	350	5345
	350	14	838	838	854	482	550	386	6510
	400	16	864	864	879	508	870	574	8620
	450	18	978	978	994	584	1025	855	11155
	500	20	1016	1016	1035	660	1500	1175	13935
	600	24	1346	1346	1368	762	2500	2030	20420
	650	26	1346	1346	1372	762	2800	2275	25000
	700	28	1499	1499	1524	889	3000	2404	28750
	750	30	1594	1594	1619	977	3400	2710	33910
	800	32	1727	1727	–	1016	3700	2897	42230
	900	36	2083	2083	–	1143	4300	3330	61570
Class 600	50	2	292	292	295	161	34	25	–
	65	2 1/2	330	330	333	175	45	33	–
	80	3	356	356	359	203	60	44	285
	100	4	432	432	435	228	95	64	520
	150	6	559	559	562	304	200	134	1245
	200	8	660	660	664	406	275	175	2210
	250	10	787	787	791	469	450	280	3600
	300	12	838	838	841	533	615	415	5120
	350	14	889	889	892	609	850	550	6150
	400	16	991	991	994	660	1150	720	8070
	450	18	1092	1092	1095	774	1620	1120	10510
	500	20	1194	1194	1200	889	2000	1400	12855
	600	24	1397	1397	1407	965	3100	2220	18680
	650	26	1448	1448	1461	1016	3800	3010	24600
	700	28	1600	1600	1613	1066	4600	3724	29950
	750	30	1651	1651	1664	1168	5500	4528	34680

Pressure: Class600 ~ 2500

● Pressure sealed bonnet

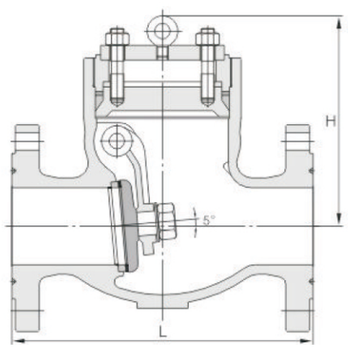

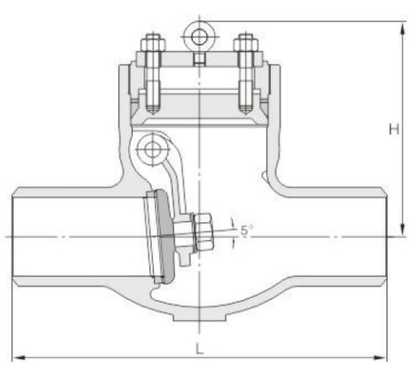

Main Dimensions & Weight

Pressure	Size		Dimension (mm)				Weight(kg)		Cv
	mm	in	L_{RF}	L_{BW}	L_{RTT}	H	RF	BW	
Class 600	50	2	292	178	295	225	30	22	–
	65	21/2	330	216	333	240	42	30	–
	80	3	356	254	359	254	64	48	285
	100	4	432	305	435	279	100	67	520
	150	6	559	457	562	368	176	110	1245
	200	8	660	584	664	393	305	205	2210
	250	10	787	711	791	457	495	325	3400
	300	12	838	812	841	584	680	480	5120
	350	14	889	889	892	609	914	600	6150
	400	16	991	991	994	685	1236	800	8070
	450	18	1092	1092	1095	736	1994	1490	10510
	500	20	1194	1194	1200	762	2293	1675	12855
	600	24	1397	1397	1407	889	3180	2300	18680
	650	26	1448	1448	1461	1016	3500	2710	24600
	700	28	1600	1600	1613	1066	4001	3125	29950
	750	30	1651	1651	1664	1168	4686	3710	34680
Class 900	50	2	368	216	371	225	40	30	–
	65	21/2	419	254	422	240	60	39	–
	80	3	381	305	384	254	116	90	260
	100	4	457	365	460	279	146	100	485
	150	6	610	508	613	381	345	245	1140
	200	8	737	660	740	533	595	425	2010
	250	10	838	787	841	558	915	675	3140
	300	12	965	914	968	609	1230	900	4590
	350	14	1029	991	1038	736	1635	1125	5565
	400	16	1130	1092	1140	762	2220	1600	7270
	450	18	1219	1219	1232	863	2840	2000	9575
	500	20	1321	1321	1334	939	3756	2700	11820
	600	24	1549	1549	1568	1066	6000	4100	17020
	650	26	1701	1701	1723	1143	6375	5100	–
	700	28	1828	1828	1850	1193	7229	5750	–
	750	30	2032	2032	2054	1270	8232	6510	–
Class 1500	50	2	368	216	371	225	68	48	–
	65	21/2	419	254	422	240	97	65	–
	80	3	470	305	473	254	112	90	240
	100	4	546	405	549	279	177	115	425
	150	6	705	559	711	405	395	250	1000
	200	8	832	711	841	567	710	470	1750
	250	10	991	864	1000	585	1210	800	2735
	300	12	1130	991	1146	630	1970	1350	3990
	350	14	1257	1067	1276	750	2600	1800	4800
	400	16	1384	1194	1407	787	3250	2200	6265
	450	18	1537	1537	1559	885	3960	2600	8255
	500	20	1664	1664	1686	960	4400	2700	10350
	600	24	1943	1943	1972	1120	6800	4100	14865
Class 2500	50	2	451	279	454	225	118	80	–
	65	21/2	508	330	514	249	150	102	–
	80	3	578	368	584	254	204	120	115
	100	4	673	457	683	279	352	220	195
	150	6	914	610	927	420	880	540	475
	200	8	1022	762	1038	570	1440	920	850
	250	10	1270	914	1292	1010	2652	1692	1350
	300	12	1422	1041	1445	1160	3756	2296	1970

Design

GDV. cast steel ball valve are designed and manufactured to provide maximum service life and dependability. All gate valves are full ported and meet the design requirements of American petroleum Institute Standard API 600 & API 6D, British Standard BS 5351 and generally conform to American Society of Mechanical Engineers Standard ASME B 16.34. Valves are available in a complete range of body/bonnet materials and trims.

Rang of Materials

Standard body/bonnet materials include nine grades of carbon, low alloy and stainless steels. For special apolications they can be supplied in other grades of alloy and stainless steel. There' s a full range of trim materials to match any service. Optional packing and gasket materials are available for a full range of service conditions.

Available Modifications For GDV. Cast Steel Valves

* Trim changes
* End connection Modifications
* Packing and Gasket Changes
* Operator Mounting
* Handwheel Extensions
* Pressure Equalizing
* AS or FD
* Customer specified Coatings
* Weld End Bore Changes
* Oxygen & Chlorine Cleaning & Packaging

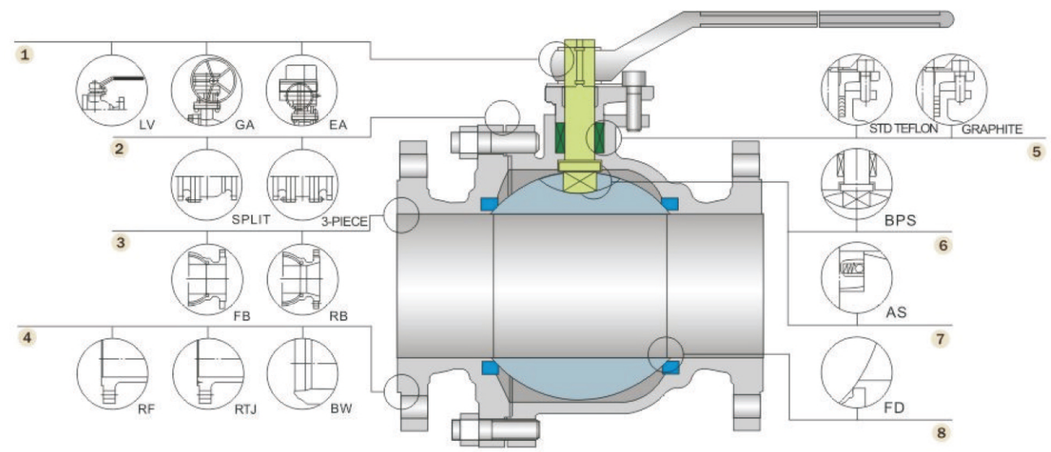

1 Operating

Extended lever for easy operation. Also available with gearing, motor actuators, pneumatic or hydraulic actuators for more difficult services.

3 BORE

Full Bore or Reduced Bore. Full-bore design provides exceptional flow control

5 Packing

STD Packing Multiple V-TEFLON packing, combined with live loading, maintains packing compression under high-cycle and severe service applications. Graphite packing use situatior for high-temperature.

7 AS

Anti Static. A metallic contact is always granted between ball and stem/ body to discharge eventual statics build-op during service.

2 BODY & BONNET

Split or 3-piece, split body & bonnet for 12 " & Small. Disassembles easily for repair or replacement of internal components.

4 End Connections

A choice of Flanged, RTJ flanged or Buttwelding end for piping flexibility

6 BPS

Blow-out Proof Stem. A pressure-safe stem shoulder design that protects against failure under excess pressure.

8 FD

Fire Durable. Designed to API 607 or BS 6755 to grant their operation suitability in case of fire. Secondary metal-to-metal seal acts as backup if primary seal is destroyed by fire. Valves ordered for compliance with API 607 will be provided with graphite packing and gaskets.

Applicable standards:

STEEL BALL VALVES, API 608/API 6D
STEEL BALL VALVES, ISO 10434/ISO 14313
FIRE DURABLE, API 607
ANTI STATIC, API 608
STEEL VALVES, ASME B 16.34
FACE TO FACE, ASME B 16.10
END FLANGES, ASME B 16.5
BUTTWELDING ENDS, ASME B 16.25
INSPECTION AND TEST, API 598/API 6D

Design description:

FULL PORT DESIGN
BB, BOLTED BONNET, SPLIT BODY
FLOATING BALL TYPE
BLOW-OUT PROOF STEM
FIRE DURABLE CONSTRUCTION
ANTI STATIC DEVICE
STOPPER DEVICE
ISO5211 MOUNTING PAD
FLANGED OR BUTT WELDING ENDS
AVAILABLE WITH BG OPERATOR

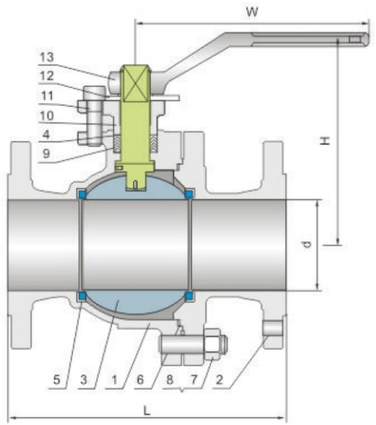

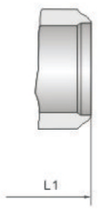

Materials of parts

No	Part Name	ASTM Material		
		Carbon Steel	18Cr-9Ni-2Mo	Carbon Steel
1	Body	A216-WCB	A351-CF8M	A352-LCB
2	Bonnet	A216-WCB	A351-CF8M	A352-LCB
3	Ball	A182-F304[1]	A182-F316	A182-F304[1]
4	Stem	A276-304	A276-316	A276-304
5	Seat Ring	R.PTFE		
6	Bonnet Gasket	Graphite+304[2]	PTFE	Graphite+304[2]
7	Bonnet Stud	A193-B7	A193-B8	A320-L7
8	Bonnet Stud Nut	A194-2H	A194-8	A194-4
9	Packing	PTFE		
10	Gland Flange	A216-WCB	A351-CF8M	A352-LCB
11	Gland Bolt	A193-B7	A193-B8	A193-B7
12	Stop Plate	Carbon Steel	Carbon Steel+Zn	Carbon Steel
13	Handle	Carbon Steel		

Note: 1). A105+ENP optional
2). Spiral wound construction.

Dimensions data

NPS DN	1/2 15	3/4 20	1 25	1 1/2 40	2 50	2 1/2 40	3 80	4 100	6 150	8 200	10 250	12 300	in mm
ANSI Class 150Lb													
L (RF)	4.25	4.62	5.00	6.50	7.00	7.50	8.00	9.00	15.50	18.00	21.00	24.00	in
	108	117	127	165	178	190	203	229	394	457	533	610	mm
L1 (BW)	5.50	6.00	6.50	7.50	8.50	9.50	11.12	12.00	18.00	20.50	22.00	25.00	in
	140	152	165	190	216	241	283	305	457	521	559	635	mm
H	2.12	2.12	2.75	3.50	4.12	6.12	7.25	8.00	10.00	11.00	13.50	16.50	in
	55	55	70	90	105	155	185	205	255	280	345	420	mm
(d)	13	19	25	38	49	62	74	100	150	201	252	303	mm
W	5	5	6	8	14	16	20	20	24	32	32	32	in
	130	130	160	200	350	400	500	500	600	800	800	800	mm
WT (kg)	2.3	3	4.5	7	9.5	15	19	33	93	160	200	280	RF
	1.8	2.8	3.7	6.2	8.5	14	21	35	98	170	225	295	BW

Applicable standards:

STEEL BALL VALVES, API 608/API 6D
STEEL BALL VALVES, ISO 10434/ISO 14313
FIRE DURABLE, API 607
ANTI STATIC, API 608
STEEL VALVES, ASME B 16.34
FACE TO FACE, ASME B 16.10
END FLANGES, ASME B 16.5
BUTTWELDING ENDS, ASME B 16.25
INSPECTION AND TEST, API 598/API 6D

Design description:

FULL PORT DESIGN
BB, BOLTED BONNET, SPLIT BODY
FLOATING BALL TYPE
BLOW-OUT PROOF STEM
FIRE DURABLE CONSTRUCTION
ANTI STATIC DEVICE
STOPPER DEVICE
ISO5211 MOUNTING PAD
FLANGED OR BUTT WELDING ENDS
AVAILABLE WITH BG OPERATOR

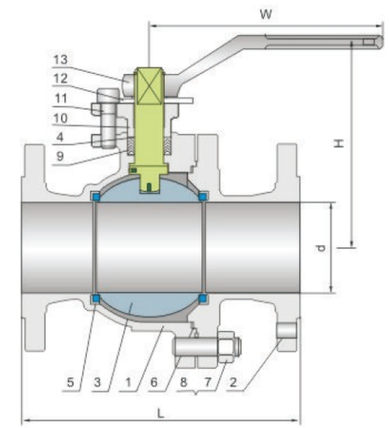

Materials of parts

No	Part Name	ASTM Material		
		Carbon Steel	18Cr-9Ni-2Mo	Carbon Steel
1	Body	A216-WCB	A351-CF8M	A352-LCB
2	Bonnet	A216-WCB	A351-CF8M	A352-LCB
3	Ball	A182-F304[1]	A182-F316	A182-F304[1]
4	Stem	A276-304	A276-316	A276-304
5	Seat Ring	R.PTFE		
6	Bonnet Gasket	Graphite+304[2]	PTFE	Graphite+304[2]
7	Bonnet Stud	A193-B7	A193-B8	A320-L7
8	Bonnet Stud Nut	A194-2H	A194-8	A194-4
9	Packing	PTFE		
10	Gland Flange	A216-WCB	A351-CF8M	A352-LCB
11	Gland Bolt	A193-B7	A193-B8	A193-B7
12	Stop Plate	Carbon Steel	Carbon Steel+Zn	Carbon Steel
13	Handle	Carbon Steel		

Note: 1). A105+ENP optional
2). Spiral wound construction.

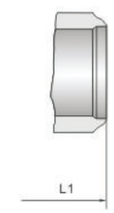

Dimensions data

NPS DN	1/2 15	3/4 20	1 25	1 1/2 40	2 50	2 1/2 40	3 80	4 100	6 150	8 200	10 250	12 300	in mm
ANSI Class 300Lb													
L (RF)	5.50	600	6.50	7.50	8.50	9.50	11.12	12.00	15.88	19.75	22.38	25.50	in
	140	152	165	190	216	241	283	305	403	502	568	648	mm
L1 (BW)	5.50	6.00	6.50	7.50	8.50	9.50	11.12	12.00	18.00	20.50	22.00	25.00	in
	140	152	165	190	216	241	283	305	457	521	559	635	mm
H	2.12	2.12	2.75	3.50	4.12	6.12	7.25	8.00	10.00	11.00	13.50	16.50	in
	55	55	70	90	105	153	187	206	255	280	345	420	mm
(d)	13	19	25	38	49	62	74	100	150	201	252	303	mm
W	5	5	6	8	14	16	20	20	24	32	32	32	in
	130	130	160	200	350	400	500	500	600	800	800	800	mm
WT (kg)	2.5	3.5	5.5	10.5	14.5	23.5	30	55	118	200	250	330	RF
	1.8	2	3.2	5.5	8.7	15	18	36	85	152	182	232	BW

Applicable standards:

STEEL BALL VALVES, API 608/API 6D
STEEL BALL VALVES, ISO 10434/ISO 14313
FIRE DURABLE, API 607
ANTI STATIC, API 608
STEEL VALVES, ASME B 16.34
FACE TO FACE, ASME B 16.10
END FLANGES, ASME B 16.5
BUTTWELDING ENDS, ASME B 16.25
INSPECTION AND TEST, API 598/API 6D

Design description:

FULL PORT DESIGN
BB, BOLTED BONNET, SPLIT BODY
FLOATING BALL TYPE
BLOW-OUT PROOF STEM
FIRE DURABLE CONSTRUCTION
ANTI STATIC DEVICE
STOPPER DEVICE
ISO5211 MOUNTING PAD
FLANGED OR BUTT WELDING ENDS
AVAILABLE WITH BG OPERATOR

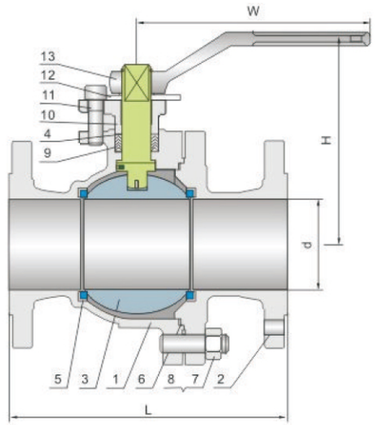

Materials of parts

No	Part Name	ASTM Material		
		Carbon Steel	18Cr-9Ni-2Mo	Carbon Steel
1	Body	A216-WCB	A351-CF8M	A352-LCB
2	Bonnet	A216-WCB	A351-CF8M	A352-LCB
3	Ball	A182-F304[1]	A182-F316	A182-F304[1]
4	Stem	A276-304	A276-316	A276-304
5	Seat Ring	R.PTFE		
6	Bonnet Gasket	Graphite+304[2]	PTFE	Graphite+304[2]
7	Bonnet Stud	A193-B7	A193-B8	A320-L7
8	Bonnet Stud Nut	A194-2H	A194-8	A194-4
9	Packing	PTFE		
10	Gland Flange	A216-WCB	A351-CF8M	A352-LCB
11	Gland Bolt	A193-B7	A193-B8	A193-B7
12	Stop Plate	Carbon Steel	Carbon Steel+Zn	Carbon Steel
13	Handle	Carbon Steel		

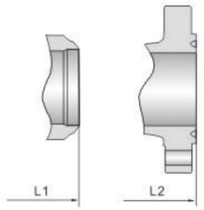

Note: 1). A105+ENP optional
2). Spiral wound construction.

Dimensions data

NPS DN	1/2 15	3/4 20	1 25	1½ 40	2 50	2½ 40	3 80	4 100	6 150	in mm
ANSI Class 600Lb										
L (RF)	6.50	7.50	8.50	9.50	11.50	13.00	14.00	17.00	22.00	in
	165	190	216	241	292	330	356	432	559	mm
L1 (BW)	-	-	-	-	11.62	13.12	14.12	17.12	22.12	in
	-	-	-	-	295	333	359	435	562	mm
H	2.38	2.38	3.00	4.00	4.75	6.88	8.38	9.25	11.38	in
	61.5	61.5	78	101	120	174	212	234	289	mm
(d)	13	19	25	38	49	62	74	100	150	mm
W	5	6	8	14	16	20	24	24	32	in
	130	160	200	350	400	500	600	600	800	mm
WT (kg)	3.3	4.5	7.2	13.5	19	31	39	71	153	RF
	2.6	3.1	4.8	8	13	22	27	53	120	BW

Design

GDV. cast steel ball valve are designed and manufactured to provide maximum service life and dependability. All gate valves are full ported and meet the design requirements of American petroleum Institute Standard API 600 & API 6D, British Standard BS 5351 and generally conform to American Society of Mechanical Engineers Standard ASME B 16.34. Valves are available in a complete range of body/bonnet materials and trims.

Rang of Materials

Standard body/bonnet materials include nine grades of carbon, low alloy and stainless steels. For special apolications they can be supplied in other grades of alloy and stainless steel. There' s a full range of trim materials to match any service. Optional packing and gasket materials are available for a full range of service conditions.

Available Modifications For GDV. Cast Steel Valves

* Trim changes
* End connection Modifications
* Packing and Gasket Changes
* Operator Mounting
* Handwheel Extensions
* Pressure Equalizing
* AS or FD
* Customer specified Coatings
* Weld End Bore Changes
* Oxygen & Chlorine Cleaning & Packaging

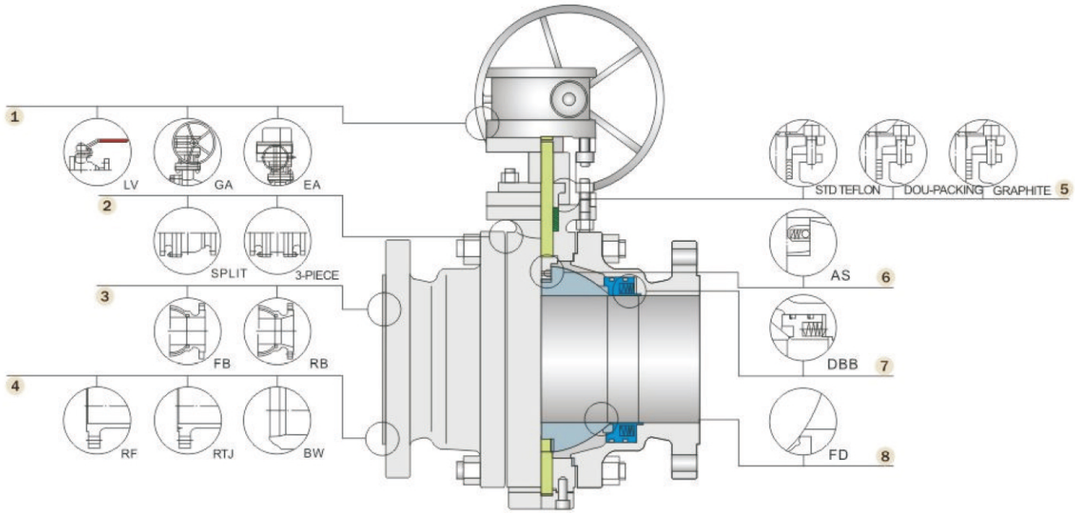

1 Operating

Extended lever for easy operation. Also available with gearing, motor actuators, pneumatic or hydraulic actuators for more difficult services.

3 BORE

Full Bore or Reduced Bore. Full-bore design provides exceptional flow control

5 Packing

STD Packing Multiple V-TEFLON packing, combined with live loading, maintains packing compression under high-cycle and severe service applications. Graphite packing use situatior for high-temperature.

7 DDB

Double Block & Bleed, The body cavity is isolated when the ball is in either fully closed of fully opened position. The medium entrapped in it can easily be bled to avoid over pressure.

2 BODY & BONNET

Split or 3-piece, split body & bonnet for 12 " & Small. Disassembles easily for repair or replacement of internal components.

4 End Connections

A choice of Flanged, RTJ flanged or Buttwelding end for piping flexibility

6 AS

Anti Static. A metallic contact is always granted between ball and stem/ body to discharge eventual statics build-op during service.

8 FD

Fire Durable. Designed to API 607 or BS 6755 to grant their operation suitability in case of fire. Secondary metal-to-metal seal acts as backup if primary seal is destroyed by fire. Valves ordered for compliance with API 607 will be provided with graphite packing and gaskets.

Applicable standards:

STEEL BALL VALVES, API 608/API 6D
STEEL BALL VALVES, ISO 10434/ISO 14313
FIRE DURABLE, API 607
ANTI STATIC, API 608
STEEL VALVES, ASME B 16.34
FACE TO FACE, ASME B 16.10
END FLANGES, ASME B 16.5
BUTTWELDING ENDS, ASME B 16.25
INSPECTION AND TEST, API 598/API 6D

Design description:

FULL PORT DESIGN
BB, BOLTED BONNET, SPLIT BODY
THREE PIECE BODY FOR 12 " & ABOVE
TRUNNION MOUNTED BALL TYPE
BLOW-OUT PROOF STEM
FIRE DURABLE CONSTRUCTION
ANTI STATIC DEVICE
STOPPER DEVICE
ISO5211 MOUNTING PAD
FLANGED OR BUTT WELDING ENDS
AVAILABLE WITH BG OPERATOR

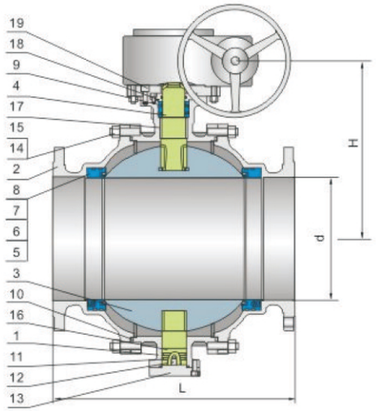

Materials of parts

No	Part Name	ASTM Material		
		Carbon Steel	18Cr-9Ni-2Mo	Carbon Steel
1	Body	A216-WCB	A351-CF8M	A352-LCB
2	Bonnet	A216-WCB	A351-CF8M	A352-LCB
3	Ball	A182-F304[1]	A182-F316	A182-F304[1]
4	Stem	A276-304	A276-316	A276-304
5	Seat	A105+ENP	A182-F316	A350-LF2+ENP
6	Seat Insert		Glass Filled PTFE	
7	Seat Spring	A313-304	Inconel X-750	A313-304
8	Seat O-Ring	NBR	Viton	Viton
9	Stem O-Ring	NBR	Viton	Viton
10	Bonnet Gasket	Graphite+304[2]	Graphite+316[2]	Graphite+304[2]
11	Bonnet O-Ring	NBR	Viton	Viton
12	Antistatic Spring	A313-304	A313-316	A313-304
13	Grounding Plunger	A216-WCB	A182-F316	A182-F304
14	Bonnet Stud	A193-B7	A193-B8	A320-L7
15	Bonnet Stud Nut	A194-2H	A194-8	A194-4
16	Trunnion	A276-304	A276-316	A276-304
17	Trunnion Bearing	304+PTFE	316+PTFE	304+PTFE
18	Gland Flange	A216-WCB	A351-CF8M	A352-LCB
19	Gland Bolt	A193-B7	A193-B8	A193-B7
20	Stop Plate	Carbon Steel	Carbon Steel+Zn	Carbon Steel
21	Handle		Carbon Steel	

Note: 1). A105+ENP optional
2). Spiral wound construction.

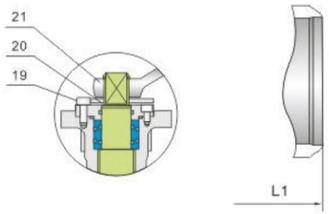

Dimensions data

NPS DN	2 50	2½ 65	3 80	4 100	6 150	8 200	10 250	12 300	14 350	16 400	18 450	20 500	24 600	26 650	28 700	30 750	32 800	36 900	in mm
ANSI Class 150Lb																			
L (RF)	7.00	7.50	8.00	9.00	15.50	18.00	21.00	24.00	27.00	30.00	34.00	36.00	42.00	45.00	49.00	51.00	54.00	60.00	in
	178	190	203	229	394	457	533	610	686	762	864	914	1067	1143	1245	1295	1372	1524	mm
L1 (BW)	8.50	9.50	11.12	12.00	18.00	20.50	22.00	25.00	30.00	33.00	36.00	39.00	45.00	49.00	53.00	55.00	60.00	68.00	in
	216	241	283	305	457	521	559	635	762	838	914	991	1143	1245	1346	1397	1524	1727	mm
H	7.00	7.50	8.25	9.25	20.88	24.62	25.62	30.75	31.00	36.25	38.25	43.38	45.25	50.75	55.12	64.12	70.88	80.75	in
	177	190	210	235	530	625	650	780	790	920	970	1100	1150	1290	1400	1630	1840	2050	mm
(d)	49	62	74	100	150	201	252	303	334	385	436	487	589	633	684	735	779	874	mm
W	14	16	20	20	24	24	24	24	32	32	32	32	32	32	32	32	32	32	in
	350	400	500	500	600	600	600	600	800	800	800	800	800	800	800	800	800	800	mm
WT (kg)	15	19	27	38	81	140	160	205	260	390	510	750	1200	1400	1860	2100	2530	2970	RF
	13.5	15.5	24.5	32.5	76	132	147	182	241	370	495	726	1125	1250	1640	1930	2390	2760	BW

Applicable standards:

STEEL BALL VALVES, API 608/API 6D
STEEL BALL VALVES, ISO 10434/ISO 14313
FIRE DURABLE, API 607
ANTI STATIC, API 608
STEEL VALVES, ASME B 16.34
FACE TO FACE, ASME B 16.10
END FLANGES, ASME B 16.5
BUTTWELDING ENDS, ASME B 16.25
INSPECTION AND TEST, API 598/API 6D

Design description:

FULL PORT DESIGN
BB, BOLTED BONNET, SPLIT BODY
THREE PIECE BODY FOR 12 " & ABOVE
TRUNNION MOUNTED BALL TYPE
BLOW-OUT PROOF STEM
FIRE DURABLE CONSTRUCTION
ANTI STATIC DEVICE
STOPPER DEVICE
ISO5211 MOUNTING PAD
FLANGED OR BUTT WELDING ENDS
AVAILABLE WITH BG OPERATOR

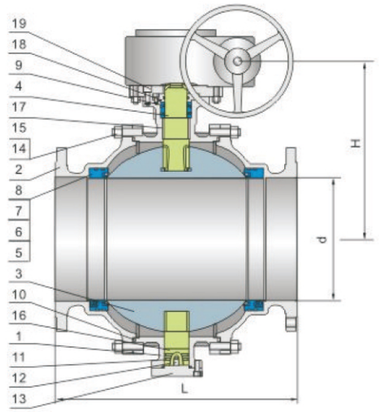

Materials of parts

No	Part Name	ASTM Material		
		Carbon Steel	18Cr-9Ni-2Mo	Carbon Steel
1	Body	A216-WCB	A351-CF8M	A352-LCB
2	Bonnet	A216-WCB	A351-CF8M	A352-LCB
3	Ball	A182-F304[1]	A182-F316	A182-F304[1]
4	Stem	A276-304	A276-316	A276-304
5	Seat	A105+ENP	A182-F316	A350-LF2+ENP
6	Seat Insert		Glass Filled PTFE	
7	Seat Spring	A313-304	Inconel X-750	A313-304
8	Seat O-Ring	NBR	Viton	Viton
9	Stem O-Ring	NBR	Viton	Viton
10	Bonnet Gasket	Graphite+304[2]	Graphite+316[2]	Graphite+304[2]
11	Bonnet O-Ring	NBR	Viton	Viton
12	Antistatic Spring	A313-304	A313-316	A313-304
13	Grounding Plunger	A216-WCB	A182-F316	A182-F304
14	Bonnet Stud	A193-B7	A193-B8	A320-L7
15	Bonnet Stud Nut	A194-2H	A194-8	A194-4
16	Trunnion	A276-304	A276-316	A276-304
17	Trunnion Bearing	304+PTFE	316+PTFE	304+PTFE
18	Gland Flange	A216-WCB	A351-CF8M	A352-LCB
19	Gland Bolt	A193-B7	A193-B8	A193-B7
20	Stop Plate	Carbon Steel	Carbon Steel+Zn	Carbon Steel
21	Handle		Carbon Steel	

Note: 1). A105+ENP optional
2). Spiral wound construction.

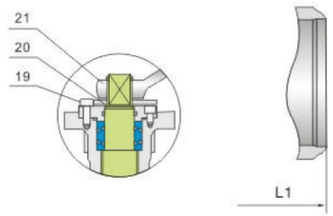

Dimensions data

NPS DN	2 50	2½ 65	3 80	4 100	6 150	8 200	10 250	12 300	14 350	16 400	18 450	20 500	24 600	26 650	28 700	30 750	32 800	in mm
ANSI Class 300Lb																		
L (RF)	8.50	9.50	11.12	12.00	15.88	19.75	22.38	25.50	30.00	33.00	36.00	39.00	45.00	49.00	53.00	55.00	60.00	in
	216	241	283	305	403	502	568	648	762	838	914	991	1143	1245	1346	1397	1524	mm
L1 (BW)	8.50	9.50	11.12	12.00	18.00	20.50	22.00	25.00	30.00	33.00	36.00	39.00	45.00	49.00	53.00	55.00	60.00	in
	216	241	283	305	403	521	559	635	762	838	914	991	1143	1245	1346	1397	1524	mm
H	7.00	7.50	8.25	9.25	20.88	24.62	56.62	30.75	31.00	36.25	38.25	43.38	45.25	50.75	55.12	64.12	70.88	in
	177	190	210	235	530	625	650	780	790	920	970	1100	1150	1290	1400	1630	1800	mm
(d)	49	62	74	100	150	201	252	303	334	385	436	487	589	633	684	735	779	mm
W	14	16	20	20	24	24	24	24	32	32	32	32	32	32	32	32	32	in
	350	400	500	500	600	600	600	600	800	800	800	800	800	800	800	800	800	mm
WT (kg)	19	24	34	48	101	175	200	255	325	485	635	935	1500	1750	2225	2450	2870	RF
	14	16	25	34	82	145	155	185	238	375	516	782	1280	1375	1825	2180	2260	BW

Applicable standards:

STEEL BALL VALVES, API 608/API 6D
STEEL BALL VALVES, ISO 10434/ISO 14313
FIRE DURABLE, API 607
ANTI STATIC, API 608
STEEL VALVES, ASME B 16.34
FACE TO FACE, ASME B 16.10
END FLANGES, ASME B 16.5
BUTTWELDING ENDS, ASME B 16.25
INSPECTION AND TEST, API 598/API 6D

Design description:

FULL PORT DESIGN
BB, BOLTED BONNET, SPLIT BODY
THREE PIECE BODY FOR 12 " & ABOVE
TRUNNION MOUNTED BALL TYPE
BLOW-OUT PROOF STEM
FIRE DURABLE CONSTRUCTION
ANTI STATIC DEVICE
STOPPER DEVICE
ISO5211 MOUNTING PAD
FLANGED OR BUTT WELDING ENDS
AVAILABLE WITH BG OPERATOR

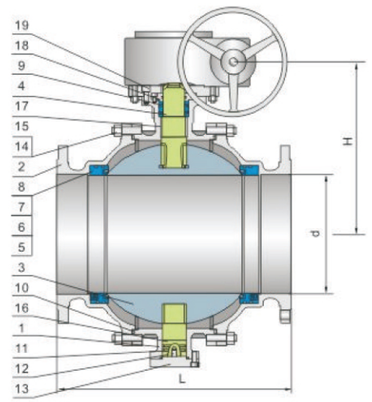

Materials of parts

No	Part Name	ASTM Material		
		Carbon Steel	18Cr-9Ni-2Mo	Carbon Steel
1	Body	A216-WCB	A351-CF8M	A352-LCB
2	Bonnet	A216-WCB	A351-CF8M	A352-LCB
3	Ball	A182-F304[1]	A182-F316	A182-F304[1]
4	Stem	A276-304	A276-316	A276-304
5	Seat	A105+ENP	A182-F316	A350-LF2+ENP
6	Seat Insert		Glass Filled PTFE	
7	Seat Spring	A313-304	Inconel X-750	A313-304
8	Seat O-Ring	NBR	Viton	Viton
9	Stem O-Ring	NBR	Viton	Viton
10	Bonnet Gasket	Graphite+304[2]	Graphite+316[2]	Graphite+304[2]
11	Bonnet O-Ring	NBR	Viton	Viton
12	Antistatic Spring	A313-304	A313-316	A313-304
13	Grounding Plunger	A216-WCB	A182-F316	A182-F304
14	Bonnet Stud	A193-B7	A193-B8	A320-L7
15	Bonnet Stud Nut	A194-2H	A194-8	A194-4
16	Trunnion	A276-304	A276-316	A276-304
17	Trunnion Bearing	304+PTFE	316+PTFE	304+PTFE
18	Gland Flange	A216-WCB	A351-CF8M	A352-LCB
19	Gland Bolt	A193-B7	A193-B8	A193-B7
20	Stop Plate	Carbon Steel	Carbon Steel+Zn	Carbon Steel
21	Handle		Carbon Steel	

Note: 1). A105+ENP optional
2). Spiral wound construction.

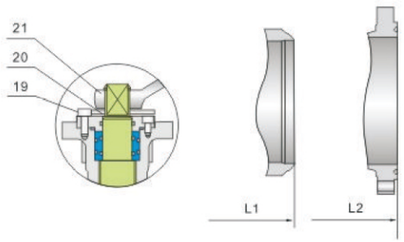

Dimensions data

NPS / DN	2 / 50	2½ / 65	3 / 80	4 / 100	6 / 150	8 / 200	10 / 250	12 / 300	14 / 350	16 / 400	18 / 450	20 / 500	24 / 600	26 / 650	28 / 700	in / mm
ANSI Class 600Lb																
L (RF)	11.50	13.00	14.00	17.00	22.00	26.00	31.00	33.00	35.00	39.00	43.00	47.00	55.00	57.00	61.00	in
	292	330	356	432	559	660	787	838	889	991	1092	1194	1397	1448	1549	mm
L1 (BW)	11.62	13.12	14.12	17.12	22.12	26.12	21.12	33.12	35.12	39.12	43.12	47.25	55.38	57.50	61.50	in
	295	333	359	435	562	664	791	841	892	994	1095	1200	1407	1461	1562	mm
H	7.12	7.62	8.50	9.50	21.25	25.00	26.12	31.12	31.88	36.38	38.75	44.50	46.62	52.50	57.00	in
	180	193	215	241	540	635	665	790	810	925	985	1130	1185	1335	1450	mm
(d)	49	62	74	100	150	201	252	303	334	385	436	487	589	633	684	mm
W	14	16	20	20	24	24	24	24	32	32	32	32	32	32	32	in
	350	400	500	500	600	600	600	600	800	800	800	800	800	800	800	mm
WT (kg)	26	35	58	81	142	287	540	780	1000	1300	1700	2100	3400	3800	4500	RF
	19	25	42	51	85	200	395	610	805	1010	1350	1656	2775	3125	3790	BW

Applicable standards:

STEEL BALL VALVES, API 608/API 6D
STEEL BALL VALVES, ISO 10434/ISO 14313
FIRE DURABLE, API 607
ANTI STATIC, API 608
STEEL VALVES, ASME B 16.34
FACE TO FACE, ASME B 16.10
END FLANGES, ASME B 16.5
BUTTWELDING ENDS, ASME B 16.25
INSPECTION AND TEST, API 598/API 6D

Design description:

FULL PORT DESIGN
BB, BOLTED BONNET, SPLIT BODY
THREE PIECE BODY FOR 12 " & ABOVE
TRUNNION MOUNTED BALL TYPE
BLOW-OUT PROOF STEM
FIRE DURABLE CONSTRUCTION
ANTI STATIC DEVICE
STOPPER DEVICE
ISO5211 MOUNTING PAD
FLANGED OR BUTT WELDING ENDS
AVAILABLE WITH BG OPERATOR

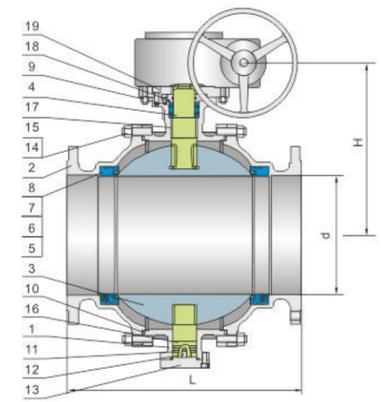

Materials of parts

No	Part Name	ASTM Material		
		Carbon Steel	18Cr-9Ni-2Mo	Carbon Steel
1	Body	A216-WCB	A351-CF8M	A352-LCB
2	Bonnet	A216-WCB	A351-CF8M	A352-LCB
3	Ball	A182-F304[1]	A182-F316	A182-F304[1]
4	Stem	A276-304	A276-316	A276-304
5	Seat	A105+ENP	A182-F316	A350-LF2+ENP
6	Seat Insert		Glass Filled PTFE	
7	Seat Spring	A313-304	Inconel X-750	A313-304
8	Seat O-Ring	NBR	Viton	Viton
9	Stem O-Ring	NBR	Viton	Viton
10	Bonnet Gasket	Graphite+304[2]	Graphite+316[2]	Graphite+304[2]
11	Bonnet O-Ring	NBR	Viton	Viton
12	Antistatic Spring	A313-304	A313-316	A313-304
13	Grounding Plunger	A216-WCB	A182-F316	A182-F304
14	Bonnet Stud	A193-B7	A193-B8	A320-L7
15	Bonnet Stud Nut	A194-2H	A194-8	A194-4
16	Trunnion	A276-304	A276-316	A276-304
17	Trunnion Bearing	304+PTFE	316+PTFE	304+PTFE
18	Gland Flange	A216-WCB	A351-CF8M	A352-LCB
19	Gland Bolt	A193-B7	A193-B8	A193-B7
20	Stop Plate	Carbon Steel	Carbon Steel+Zn	Carbon Steel
21	Handle		Carbon Steel	

Note: 1). A105+ENP optional
2). Spiral wound construction.

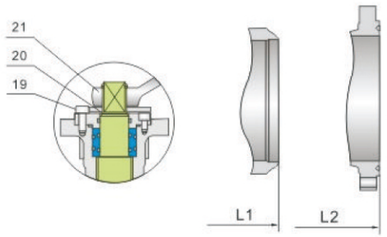

Dimensions data

NPS / DN	2 / 50	2½ / 65	3 / 80	4 / 100	6 / 150	8 / 200	10 / 250	12 / 300	14 / 350	16 / 400	18 / 450	20 / 500	24 / 600	in / mm
ANSI Class 900Lb														
L (RF)	14.50	16.50	15.00	18.00	24.00	29.00	33.00	38.00	40.50	44.50	48.00	52.00	61.00	in
	368	419	381	457	610	737	838	965	1029	1130	1219	1321	1549	mm
L1 (BW)	14.62	16.62	15.12	18.12	24.12	29.12	33.12	38.12	40.88	44.88	48.50	52.50	61.75	in
	371	422	384	460	613	740	641	968	1038	1140	1232	1334	1568	mm
H	8.62	9.25	10.25	15.38	25.75	30.25	31.75	38.00	38.50	45.00	47.00	53.50	56.00	in
	219	235	260	390	655	770	805	965	980	1145	1195	1360	1425	mm
(d)	49	62	74	100	150	201	252	303	322	373	423	471	570	mm
W	20	20	20	24	24	24	24	32	32	32	32	32	32	in
	500	500	500	600	600	600	600	800	800	800	800	800	800	mm
WT (kg)	31	43	68	98	171	345	650	940	1205	1565	2050	2535	3950	RF
	23	31	51	61	102	240	480	735	965	1215	1625	1995	3335	BW

Applicable standards:

STEEL BALL VALVES, API 608/API 6D
STEEL BALL VALVES, ISO 10434/ISO 14313
FIRE DURABLE, API 607
ANTI STATIC, API 608
STEEL VALVES, ASME B 16.34
FACE TO FACE, ASME B 16.10
END FLANGES, ASME B 16.5
BUTTWELDING ENDS, ASME B 16.25
INSPECTION AND TEST, API 598/API 6D

Design description:

FULL PORT DESIGN
BB, BOLTED BONNET, SPLIT BODY
THREE PIECE BODY FOR 12 " & ABOVE
TRUNNION MOUNTED BALL TYPE
BLOW-OUT PROOF STEM
FIRE DURABLE CONSTRUCTION
ANTI STATIC DEVICE
STOPPER DEVICE
ISO5211 MOUNTING PAD
FLANGED OR BUTT WELDING ENDS
AVAILABLE WITH BG OPERATOR

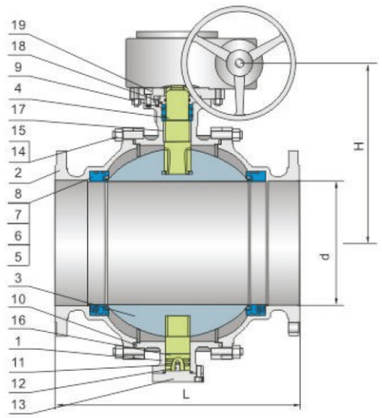

Materials of parts

No	Part Name	ASTM Material		
		Carbon Steel	18Cr-9Ni-2Mo	Carbon Steel
1	Body	A216-WCB	A351-CF8M	A352-LCB
2	Bonnet	A216-WCB	A351-CF8M	A352-LCB
3	Ball	A182-F304[1]	A182-F316	A182-F304[1]
4	Stem	A276-304	A276-316	A276-304
5	Seat	A105+ENP	A182-F316	A350-LF2+ENP
6	Seat Insert	Glass Filled PTFE		
7	Seat Spring	A313-304	Inconel X-750	A313-304
8	Seat O-Ring	NBR	Viton	Viton
9	Stem O-Ring	NBR	Viton	Viton
10	Bonnet Gasket	Graphite+304[2]	Graphite+316[2]	Graphite+304[2]
11	Bonnet O-Ring	NBR	Viton	Viton
12	Antistatic Spring	A313-304	A313-316	A313-304
13	Grounding Plunger	A216-WCB	A182-F316	A182-F304
14	Bonnet Stud	A193-B7	A193-B8	A320-L7
15	Bonnet Stud Nut	A194-2H	A194-8	A194-4
16	Trunnion	A276-304	A276-316	A276-304
17	Trunnion Bearing	304+PTFE	316+PTFE	304+PTFE
18	Gland Flange	A216-WCB	A351-CF8M	A352-LCB
19	Gland Bolt	A193-B7	A193-B8	A193-B7
20	Stop Plate	Carbon Steel	Carbon Steel+Zn	Carbon Steel
21	Handle		Carbon Steel	

Note: 1). A105+ENP optional
2). Spiral wound construction.

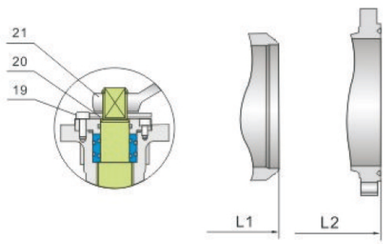

Dimensions data

NPS DN	2 50	2½ 65	3 80	4 100	6 150	8 200	10 250	12 300	14 350	16 400	2 50	2½ 65	3 80	4 100	6 150	8 200	10 250	12 300	in mm
	ANSI Class 1500Lb										ANSI Class 2500Lb								
L/L1 (RF)/(BW)	14.50	16.50	18.50	21.50	27.75	32.75	39.00	44.50	49.50	54.50	17.75	20.00	22.75	26.50	36.00	40.25	50.00	56.00	in
	368	419	470	546	705	832	991	1130	1257	1384	451	508	578	673	914	1022	1270	1422	mm
L2 (RTJ)	14.62	16.62	18.62	21.62	28.00	33.12	39.38	45.12	50.25	55.38	17.88	21.25	23.00	26.88	36.50	40.88	50.88	56.88	in
	371	422	473	549	711	841	1000	1146	1276	1407	454	540	584	683	927	1038	1292	1445	mm
H	11.25	12.00	13.25	20.00	33.50	39.38	41.12	49.38	50.00	58.50	12.00	12.88	14.25	21.25	35.88	42.12	44.00	53.00	in
	285	306	338	506	852	1000	1045	1255	1270	1485	304	327	362	540	911	1070	1120	1345	mm
(d)	49	62	74	100	144	192	239	287	315	360	42	52	62	87	131	179	223	265	mm
W	20	20	24	24	24	32	32	32	32	32	20	24	24	24	32	32	32	32	in
	500	500	600	600	600	800	800	800	800	800	500	600	600	600	800	800	800	800	mm
WT (kg)	49	67	106	153	268	540	1020	1475	1885	2455	55	76	120	173	302	612	1150	1665	RF/RTJ
	33	44	73	87	145	345	685	1050	1385	1735	41	55	91	110	182	430	855	1315	BW

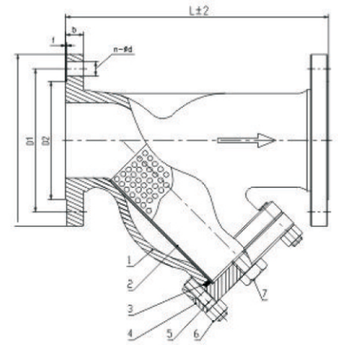

STANDARD

Design standard: ASME B 16.34
Face to face dimension: ASME B 16.10
Flanged ends: ANSI B 16.5
Test & inspection: API 598

ADVANTAGE

1.API Y type strainer is used to separate the impurity of media. It can protect other equipment for a regular service.
2.Stainless steel filter traps make a better performance and corrosion–resistance.
3.Maintenance is easy. All you need is just clean the filter traps.

部分材料标准

NO.	Part name	Material
1	Body	WCB/LCB/WC6/CF8/CF8M
2	Filter net	SS304/SS316
3	Cover	WCB/LCB/WC6/CF8/CF8M
4	Bolt	B7/B8/45/35
5	Nut	2H/8/45/35
6	Gasket	Flexible graphite +304
7	Plug	45/304/316

SCREENS MESH FORM

Water Media	20–40 Mesh
Gas Media	40–100 Mesh
Oil Media	10–120 Mesh

MAIN CONNECTION SIZE

inch	mm	d	D	D1	D2	b	n–ϕd	L	H
150LB									
2"	50	51	152	120.7	92	16	4–ϕ19	203	205
2½"	65	64	178	139.7	105	18	4–ϕ19	216	230
3"	80	76	190	152.4	127	19	4–ϕ19	241	255
4"	100	102	229	190.5	157	24	8–ϕ19	292	300
5"	125	127	254	215.9	186	24	8–ϕ22	356	350
6"	150	152	279	241.3	216	26	8–ϕ22	406	390
8"	200	203	343	298.5	270	29	8–ϕ22	495	450
10"	250	254	406	362.0	324	31	12–ϕ26	622	580
12"	300	305	483	431.8	381	32	12–ϕ26	698	640
14"	350	337	533	476.3	413	35	12–ϕ29	787	720
16"	400	387	597	539.8	470	37	16–ϕ29	914	900
18"	450	438	635	577.9	533	40	16–ϕ32	978	1100
20"	500	489	699	635.0	584	43	20–ϕ32	978	1225
24"	600	591	813	749.3	692	48	20–ϕ35	1295	1335
300LB									
2"	50	51	165	120.7	92	23	8–ϕ19	267	235
2½"	65	64	190	149.2	105	26	8–ϕ22	292	250
3"	80	76	210	168.3	127	29	8–ϕ22	318	289
4"	100	102	254	200.0	157	32	8–ϕ22	356	320
5"	125	127	279	235.0	186	35	8–ϕ22	400	365
6"	150	152	318	269.9	216	37	12–ϕ22	444	420
8"	200	203	381	330.2	270	42	12–ϕ26	559	480
10"	250	254	445	387.4	324	48	16–ϕ29	622	600
12"	300	305	521	450.8	381	51	16–ϕ32	711	700
14"	350	337	584	514.4	413	54	20–ϕ32	838	770
16"	400	387	648	571.5	470	58	20–ϕ35	864	915
18"	450	432	711	628.6	533	61	24–ϕ35	978	1150
20"	500	483	775	685.8	584	64	24–ϕ35	1016	1250
24"	600	584	914	812.8	692	70	24–ϕ41	1346	1330