Royale Valve

www.greatdesignvalve.com

Products Show

Contens

DIN Standard s pattern bellow sealed globe valve 01
ANSI Standard s pattern bellow sealed globe valve 02
ANSI Standard high pressure bellow sealed globe valve 03
Forged steel bellow sealed globe valve 04
Extended bellow sealed globe valve 05
Forged steel bellow sealed gate valve 06
Y Type s pattern bellow sealed valve 07
Angle I pattern bellow sealed globe valve 08
DIN Standard globe valve 09
ANSI Standard bellow sealed gate valve 10
DIN Standard Y type strainer 11
DIN Standard check valve 12
Chlorine-specific valve 13
DIN Standard gate valve 14
DIN Standard safety valve 15
JIS / DIN/GOST/ANSI Safety valve 16
Pilot operated pressure reducing valve 17
Steam-water separator 18
Lever ball float type steam trap 19
Lever ball float type steam trap 20
Thermodynamic disc steam trap 21
Syplphon type steam trap 22
Inverted bucket type steam trap 23-24
Lpmp steam condensate recovery system 25-26
API Cast steel gate valve 27-35
ANSI Cast steel globe valve 36-41
API Swing check valve 42-43
API Cast steel floating ball valve 44-47
API Cast steel trunnion mounted ball valve 48-53
API Y Type filter 54

Royale Valve

DIN STANDARD S PATTERN BELLOW SEALED GLOBE VALVE

DESIGN

Bellow sealed globe valve in forged and cast steel
Straight pattern with bolted bonnet
Rising, non rotating stem
Increased stem nut positioning,
Blowout safety bonnet sealing
Flange– or BW–ends
Welded seat
Seat in stellite or Cr–steel
Self adjusted gland

STANDARD

Design:EN 13709,EN 12516
Face to face:EN 558–1,EN12982
Flange: EN1092–1
Bellows: MSS–SP 117
BW–ends: EN12627
Marking: EN 19
Pressure test: EN12266–1
CE–mark according: PED97/23, category 3

APPLICATIONS

Water, steam, and other medium which not damage the internal components
Uses within the all kind of industries
The valves are designed for shut of application or simple regulation

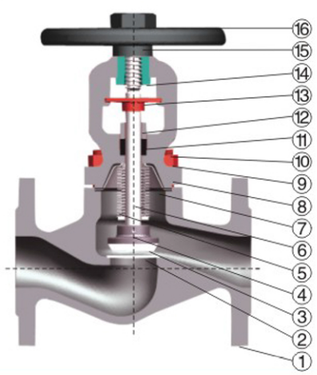

MAIN PARTS MATERIALS

NO.	Part name	Material
1	Body	1.0619+N
2	Seat	1.4021+QT、1.4301
3	Disc	1.4021+QT、1.4301+Stellite
4	Pin	1.4301、1.4401
5	Bellow assembly	1.4301、1.4401、1.4571
6	Stem	1.4021+QT、1.4301
7	Gasket	Flexible graphite+stainless steel
8	Bonnet	1.0619+N
9	Nut	ASTM A194–2H、A194–8
10	Studs	A193 B7、25CrMo4、1.7218
11	Packing	Pure Graphite
12	Gland	1C25、1.4301、1.4401
13	Locator	1C25
14	Yoke Nut	Steel alloy、Brass、Bronze
15	Handwheel	CAST IRON、CAST STEEL
16	Cap	1C45

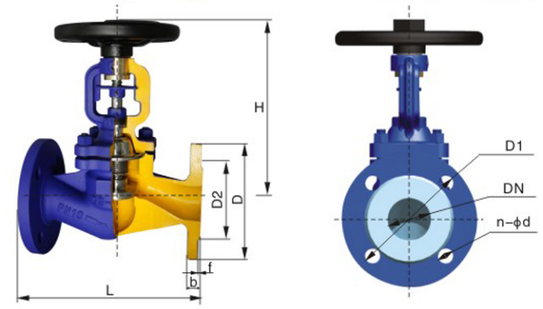

MAIN CONNECTION SIZE

DN	Main connection size								
	L	D	D1	D2	b	f	H	n–ϕd	Kv(m³/h)
PN 16									
15	130	95	65	45	16	2	195	4–ϕ14	5.3
20	150	105	75	58	18	2	195	4–ϕ14	7.2
25	160	115	85	68	18	2	207	4–ϕ14	12
32	180	140	100	78	18	2	218	4–ϕ18	16
40	200	150	110	88	18	3	225	4–ϕ18	28.5
50	230	165	125	102	20	3	230	4–ϕ18	43
65	290	185	145	122	20	3	272	4–ϕ18	75
80	310	200	160	138	20	3	290	8–ϕ18	105
100	350	220	180	158	20	3	355	8–ϕ18	173
125	400	250	210	188	22	3	410	8–ϕ18	288
150	480	285	240	212	22	3	425	8–ϕ22	410
200	600	340	295	268	24	3	540	12–ϕ22	725
250	730	405	355	320	26	3	665	12–ϕ26	1145
300	850	460	410	378	28	4	720	12–ϕ26	1635
350	980	520	470	438	30	4	970	16–ϕ26	2220
400	1100	580	525	490	32	4	1055	16–ϕ30	3180
PN 25									
15	130	95	65	45	16	2	195	4–ϕ14	5.3
20	150	105	75	58	18	2	195	4–ϕ14	7.2
25	160	115	85	68	18	2	207	4–ϕ14	12
32	180	140	100	78	18	2	218	4–ϕ18	16
40	200	150	110	88	18	3	225	4–ϕ18	28.5
50	230	165	125	102	20	3	230	4–ϕ18	43
65	290	185	145	122	22	3	272	8–ϕ18	75
80	310	200	160	138	24	3	290	8–ϕ18	105
100	350	235	190	162	24	3	355	8–ϕ22	173
125	400	270	220	188	26	3	410	8–ϕ26	288
150	480	300	250	218	28	3	425	8–ϕ26	410
200	600	360	310	278	30	3	540	12–ϕ26	725
250	730	425	370	335	32	3	665	12–ϕ30	1145
300	850	485	430	395	34	4	720	16–ϕ30	1635
350	980	555	490	450	38	4	970	16–ϕ33	2220
400	1100	620	550	505	40	4	1055	16–ϕ36	3180
PN 40									
15	130	95	65	45	16	2	195	4–ϕ14	5.3
20	150	105	75	58	18	2	195	4–ϕ14	7.2
25	160	115	85	68	18	2	207	4–ϕ14	12
32	180	140	100	78	18	2	218	4–ϕ18	16
40	200	150	110	88	18	3	225	4–ϕ18	28.5
50	230	165	125	102	20	3	230	4–ϕ18	43
65	290	185	145	122	22	3	272	8–ϕ18	75
80	310	200	160	138	24	3	290	8–ϕ18	105
100	350	235	190	162	24	3	355	8–ϕ22	173
125	400	270	220	188	26	3	410	8–ϕ26	288
150	480	300	250	218	28	3	425	8–ϕ26	410
200	600	375	320	285	34	3	540	12–ϕ30	725
250	730	450	385	345	38	3	665	12–ϕ33	1145
300	850	515	450	410	42	4	720	16–ϕ33	1635
350	980	580	510	465	46	4	970	16–ϕ36	2220
400	1100	660	585	535	50	4	1055	16–ϕ39	3180

ANSI STANDARD S PATTERN BELLOW SEALED GLOBE VALVE

Royale Valve

DESIGN

Bellow sealed globe valve in forged and cast steel
Straight pattern with bolted bonnet
Rising, non rotating stem
Increased stem nut positioning,
Blowout safety bonnet sealing
Flange– or BW–ends
Welded seat
Seat in stellite or Cr–steel
Self adjusted gland

APPLICATIONS

Water, steam, and other medium which not damage the internal components
Uses within the all kind of industries
The valves are designed for shut of application or simple regulation

STANDARD

Design: API600/API6D
Face to face: ASME B 16.10
Flange: ASME B 16.5
Bellows: MSS–SP 117
BW–ends: ASME B 16.25
Pressure test: API598

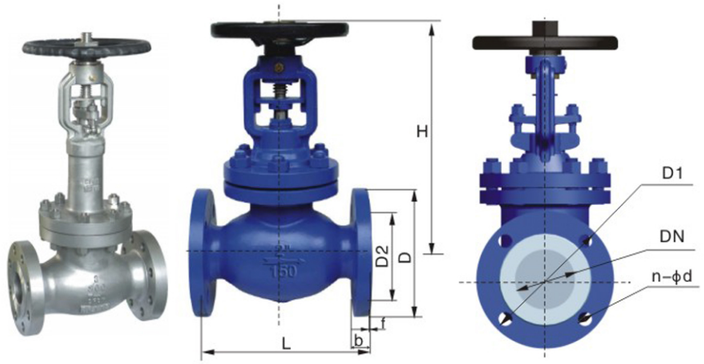

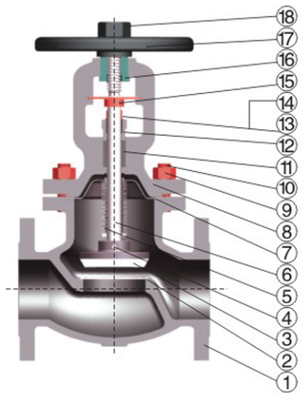

MAIN PARTS MATERIALS

NO.	Part name	Material
1	Body	WCB、CF8、CF8M
2	Seat	304、Stellite
3	Disc	13Cr、F304、F316
4	Pin	S.S304、S.S316
5	Bellow assembly	S.S304、S.S316L
6	Stem	13Cr、F304、F316
7	Gasket	Flexible graphite+stainless steel
8	Cover	WCB、CF8、CF8M
9	Nut	ASTM A194–2H、A194–8
10	Double–headed Bolt	ASTM A193–B7、A193–B8
11	Packing	Flexible graphite
12	Gland	WCB、CF8、CF8M
13	Jack Bolt	ASTM A193–B7、A193–B8
14	Nut	ASTM A194–2H、A194–8
15	Locator	1045
16	Stem nut	Copper alloy 、D2、BL2
17	Handwheel	Carbon steel
18	Cap	1025

MAIN CONNECTION SIZE

DN	Main connection size							
	L	D	D1	D2	b	f	H	n–ϕd
150Lb								
1/2 "	108	90	60.5	35	10	2	215	4–ϕ15
3/4 "	117	100	70	43	10.9	2	215	4–ϕ16
1 "	127	110	79.5	51	11.6	2	220	4–ϕ16
11/2 "	165	125	98.5	73	14.7	2	250	4–ϕ16
2 "	203	150	120.5	92	16.3	2	260	4–ϕ19
21/2 "	216	180	139.5	105	17.9	2	305	4–ϕ19
3 "	241	190	152.4	127	19.5	2	325	4–ϕ19
4 "	292	230	190.5	157	24.2	2	390	8–ϕ19
6 "	406	280	241.5	216	25.9	2	455	8–ϕ22
8 "	495	345	298.5	270	29	2	570	8–ϕ22
10"	622	405	362	324	30.6	2	920	12–ϕ25
12"	698	485	431.8	381	32.2	2	1075	12–ϕ25
14"	787	535	476.3	413	35.4	2	1290	12–ϕ29
16"	914	595	539.8	470	37	2	1620	16–ϕ29
18"	978	635	577.9	533	40.1	2	1850	16–ϕ32

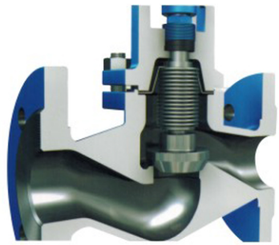

Royale Valve

ANSI STANDARD HIGH PRESSURE BELLOW SEALED GLOBE VALVE

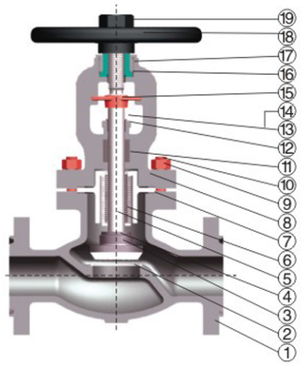

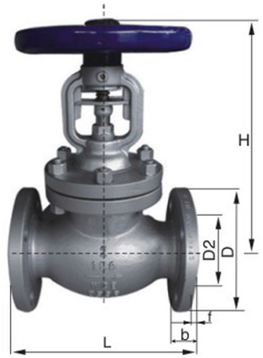

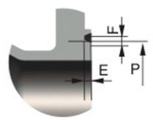

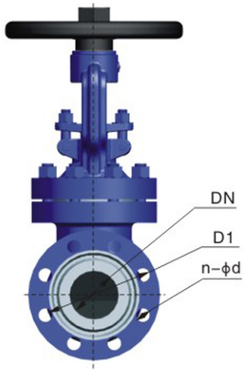

MAIN CONNECTION SIZE

300Lb								
DN	L	D	D1	D2	b	f	H	n-ϕd
1/2"	152	95	66.5	35	14.7	2	215	4-ϕ16
3/4"	178	115	82.5	43	16.3	2	215	4-ϕ19
1"	203	125	89	51	17.9	2	220	4-ϕ19
11/2"	229	155	114.5	73	21.1	2	250	4-ϕ22
2"	267	165	127	92	22.7	2	260	8-ϕ19
21/2"	292	190	149	105	25.9	2	305	8-ϕ22
3"	318	210	168.5	127	29	2	325	8-ϕ22
4"	356	255	200	157	32.2	2	390	8-ϕ22
6"	444	320	270	216	37	2	455	12-ϕ22
8"	559	380	330	270	41.7	2	570	12-ϕ25
10"	622	445	387.4	324	48.1	2	930	16-ϕ29
12"	711	520	450.8	381	51.3	2	1215	16-ϕ32
14"	838	585	514.4	413	54.4	2	1440	20-ϕ32
16"	864	650	571.5	470	57.6	2	1665	20-ϕ35

MAIN CONNECTION SIZE

600Lb								
NPS	L	L1(RTJ)	D	D1	D2	b	H	n-ϕd
1/2"	165	163	95	66.7	34.9	14.3	215	4-ϕ16
3/4"	190	190	115	82.6	42.9	15.9	215	4-ϕ19
1"	216	216	125	88.9	50.8	17.5	220	4-ϕ19
1 1/4"	229	229	135	98.4	63.5	20.7	250	4-ϕ19
11/2"	241	241	155	114.3	73	22.3	250	4-ϕ22
2"	292	295	165	127.0	92.1	25.4	450	8-ϕ19
21/2"	330	333	190	149.2	104.8	28.6	325	8-ϕ22
3"	356	359	210	168.3	127	31.8	375	8-ϕ22
4"	432	435	275	215.9	157.2	38.1	425	8-ϕ26
6"	559	562	356	292.1	215.9	47.7	920	12-ϕ29
8"	660	663	420	349.2	269.9	55.6	960	12-ϕ32
10"	787	790	510	431.8	323.8	63.5	1080	16-ϕ35
12"	838	841	560	489	381	66.7	1320	20-ϕ35
14"	889	892	605	527	412.8	69.9	1480	20-ϕ38
16"	991	994	685	603.0	469.9	76.2	1680	20-ϕ41

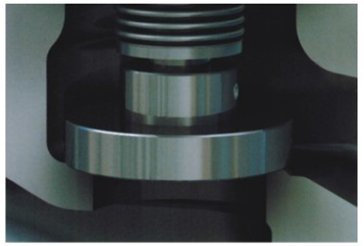

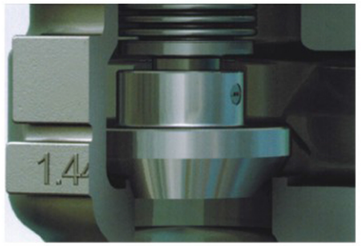

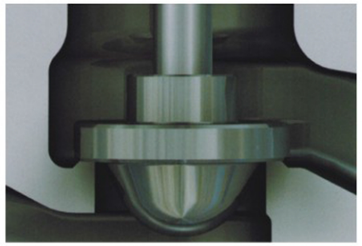

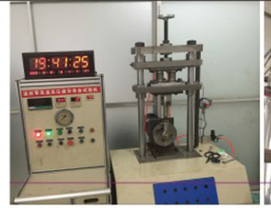

FORGED STEEL BELLOW SEALED GLOBE VALVE

Royale Valve

APPLICATION:

Petroleum, chemical industry, pharmacy, fertilizer, power industry etc.

PRODUCT MAIN ADVANTAGE:

1. Bellow seal element. The key part of bellow sealed globe valves is metal bellow. It is the connection between cover and stem with automatic roll welding. The metal bellow can keep the stem part no leakage.
2. Benefit from the cone and streamline shape design, the disc has a reliable seal and longer service life.
3. Double seal design (bellows + packing). Bellow and packing can protect against leakage and provide a excellent seal.
4. It's specially designed with bellow protector. Protector will protect bellow from the erosion of media and double service life.
5. It can reduce temperature difference and increase resistance of fatigue of bellow assembly in the high temperature working condition.
6. With special design, it will have smaller frictional resistance between stem and packing.

STANDARD

Design standard: DIN 3356,API 602
Face to face dimension:DIN 3202, ANSI B 16.10
Flanged ends: DIN 2543-2545, ANSI B 16.5
Test & inspection: DIN 3230, API 598

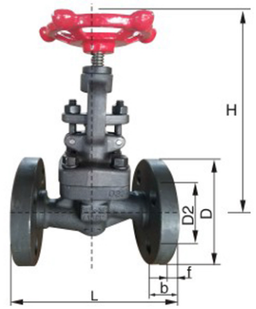

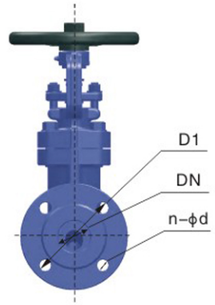

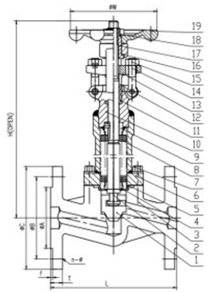

MAIN PARTS MATERIALS

NO.	Part Name	Material	QTY	Remark
1	Disc	13Cr	1	
2	Stem	13Cr	1	
3	Body	A105	1	13Cr Face
4	Lower bushing	SS304	1	
5	Gasket	SPW SS+Graphite	1	
6	Bonnet	A105	1	
7	Stud	A193-B7	4	
8	Bellow	SS304	1	
9	Upper Bushing	SS304	1	
10	Bracket	A105	1	
11	Gland Packing	Graphite		
12	Gland	13Cr	1	
13	Gland Flange	A105	1	
14	Stud	A193-B7	2	
15	Nut	A194-2H	2	
16	Sleeve Washer	13Cr	1	
17	Yoke Sleeve	13Cr	1	
18	Nut	A194-2H	1	
19	Handweel	Ron Cast	1	A197

MAIN CONNECTION SIZE

PN16/PN25/PN40

DN	L	H	W	A	B	C	T	f	N-ϕ
15	130	235	100	45	65	95	16	2	4-ϕ14
20	150	237	100	58	75	105	18	2	4-ϕ14
25	160	285	120	68	85	115	18	2	4-ϕ14
32	180	310	160	78	100	140	18	2	4-ϕ18
40	200	320	160	88	110	150	18	3	4-ϕ18
50	230	400	180	102	125	165	20	3	4-ϕ18

150Lb

NPS	L	H	W	A	B	C	T	f	N-ϕ
½	108	235	100	35	60.5	89	10	1.6	4-ϕ16
3/4	117	237	100	43	70	98	11	1.6	4-ϕ16
1	127	285	120	51	79.5	108	11.6	1.6	4-ϕ16
1 1/4	140	310	160	63.5	89	118	13.2	1.6	4-ϕ16
1 ½	165	320	160	73	98.5	127	14.7	1.6	4-ϕ16
2	203	400	180	92	120.5	152	16.3	1.6	4-ϕ19

300Lb

NPS	L	H	W	A	B	C	T	f	N-ϕ
½	152	235	100	35	66.5	95	14.5	1.6	4-ϕ16
3/4	178	237	100	43	82.5	118	16	1.6	4-ϕ19
1	203	285	120	51	89	124	17.5	1.6	4-ϕ19
1 ½	229	320	160	73	114.5	156	21	1.6	4-ϕ22
2	267	400	180	92	127	165	22.5	1.6	8-ϕ19

Size		1/2"	3/4"	1"	1-1/4"	1-1/2"	2"
L(SW/NPT)Globe valve 800LB		79	92	111	120	140	172
L(SW/NPT)Gate valve 800LB		79	92	111	120	120	140
H (Globe valve)	150LB	215	220	280	315	340	405
	300LB	215	220	280	315	340	405
	600LB	250	250	350	395	420	480
	900LB	350	350	400	450	510	750
	1500LB	350	350	400	450	510	750
H (Gate valve)	150LB	280	285	310	350	370	450
	300LB	280	285	310	350	370	450
	600LB	280	285	310	350	370	450
	900LB	380	380	420	480	550	800
	1500LB	380	380	420	480	550	800

Royale Valve

EXTENDED BELLOW SEALED GLOBE VALVE

APPLICATION:

Hot oil system, steam system, hot and cold water system etc.

PRODUCT MAIN ADVANTAGE:

1.Extended bellow sealed globe valve is the latest patented product of our company. The key part mental bellow is sealed in the extended space. Consequently the pressure and temperature of medium will not influence the bellow and it will have a longer service life.

2.The seal element of titanium which is a reliable material for high temperature and corrosion will form a triple seal. It provides a more reliable performance.

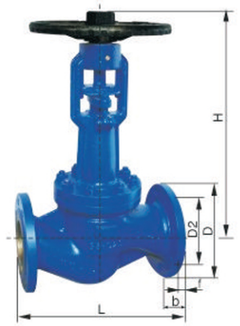

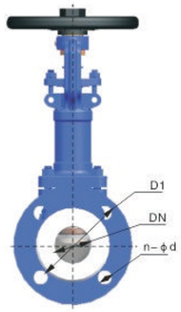

STANDARD

Design standard: DIN 3356
Face to face dimension: DIN 3202
Flanged ends: DIN 2543-2545
Test & inspection: DIN 3230

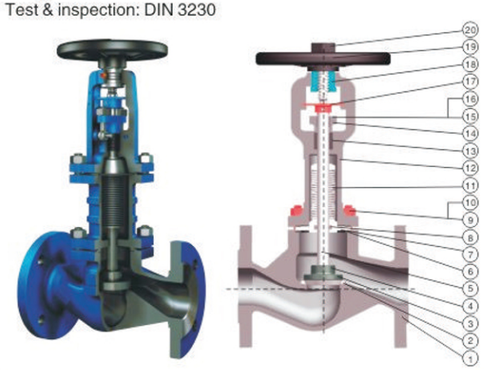

MAIN CONNECTION SIZE

DN	Main connection size PN 16						
	L	D	D1	D2	b	f	n-ϕd
15	130	95	65	45	16	2	4-ϕ14
20	150	105	75	58	18	2	4-ϕ14
25	160	115	85	68	18	2	4-ϕ14
32	180	140	100	78	18	2	4-ϕ18
40	200	150	110	88	18	3	4-ϕ18
50	230	165	125	102	20	3	4-ϕ18
65	290	185	145	122	20	3	4-ϕ18
80	310	200	160	138	20	3	8-ϕ18
100	350	220	180	158	20	3	8-ϕ18
125	400	250	210	188	22	3	8-ϕ18
150	480	285	240	212	22	3	8-ϕ22
200	600	340	295	268	24	3	12-ϕ22
250	730	405	355	320	26	3	12-ϕ26
300	850	460	410	378	28	4	12-ϕ26
350	980	520	470	438	30	4	16-ϕ26
400	1100	580	525	490	32	4	16-ϕ30
PN 25							
15	130	95	65	45	16	2	4-ϕ14
20	150	105	75	58	18	2	4-ϕ14
25	160	115	85	68	18	2	4-ϕ14
32	180	140	100	78	18	2	4-ϕ18
40	200	150	110	88	18	3	4-ϕ18
50	230	165	125	102	20	3	4-ϕ18
65	290	185	145	122	22	3	8-ϕ18
80	310	200	160	138	24	3	8-ϕ18
100	350	235	190	162	24	3	8-ϕ22
125	400	270	220	188	26	3	8-ϕ26
150	480	300	250	218	28	3	8-ϕ26
200	600	360	310	278	30	3	12-ϕ26
250	730	425	370	335	32	3	12-ϕ30
300	850	485	430	395	34	4	16-ϕ30
350	980	555	490	450	38	4	16-ϕ33
400	1100	620	550	505	40	4	16-ϕ36
PN 40							
15	130	95	65	45	16	2	4-ϕ14
20	150	105	75	58	18	2	4-ϕ14
25	160	115	85	68	18	2	4-ϕ14
32	180	140	100	78	18	2	4-ϕ18
40	200	150	110	88	18	3	4-ϕ18
50	230	165	125	102	20	3	4-ϕ18
65	290	185	145	122	22	3	8-ϕ18
80	310	200	160	138	24	3	8-ϕ18
100	350	235	190	162	24	3	8-ϕ22
125	400	270	220	188	26	3	8-ϕ26
150	480	300	250	218	28	3	8-ϕ26
200	600	375	320	285	34	3	12-ϕ30
250	730	450	385	345	38	3	12-ϕ33
300	850	515	450	410	42	4	16-ϕ33
350	980	580	510	465	46	4	16-ϕ36
400	1100	660	585	535	50	4	16-ϕ39

MAIN PARTS MATERIALS

NO.	Part name	Material
1	Body	1.0619、1.4301、1.4401
2	Seat	1.4301、Stellite
3	Disc	1.4021、1.4401
4	Pin	1.4301、1.4401
5	Stem	1.4021、1.4401
6	Gasket	PTFE、Flexible graphite
7	Seal bowl	1.4301、1.4401
8	Seal element	Titanium
9	Stud	ASTM 193-B7、A193-B8
10	Hex nuts	ASTM 194-2H、A194-8
11	Bellows	1.4301、1.4401
12	Cover	1.0619、1.4301、1.4401
13	Packing	PTFE、Flexible graphite
14	Platen	1.0619、1.4301
15	Extremely heavy bolt	ASTM 194-2H、A194-8
16	Hex nuts	ASTM 194-2H、A194-8
17	Stem guide	1C45
18	Stem nut	Copper alloy、D2、BL-2
19	Handwheel	Carbon steel
20	Locknut	1C45

Royale Valve

FORGED STEEL BELLOW SEALED GATE VALVE

APPLICATION:

Petroleum, chemical industry, pharmacy, fertilizer, power industry etc.

PRODUCT MAIN ADVANTAGE:

1.Bellow seal element. The key part of bellow sealed gate valves is metal bellow. It is the connection between cover and stem with automatic roll welding. The metal bellow can keep the stem part no leakage.

2.Double seal design(bellows + packing). Bellow and packing can protect against leakage and provide a excellent seal.

3.It's specially designed with bellow protector. Protector will protect bellow from the erosion of media and double service life of valve.

4.In the full open position, it will form a sealing between disc and seal element and protect bellow from erosion.

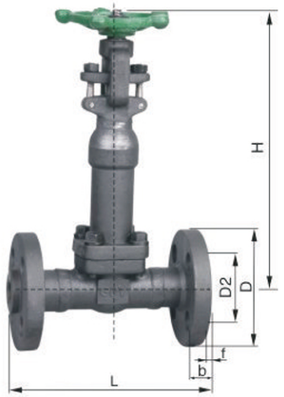

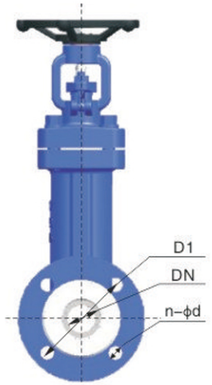

STANDARD

Design standard: DIN 3356,API 602
Face to face dimension:DIN 3202, ANSI B 16.10
Flanged ends: DIN 2543-2545, ANSI B 16.5
Test & inspection: DIN 3230, API 598

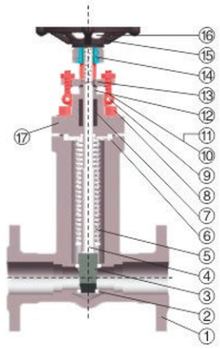

MAIN CONNECTION SIZE

DN	PN 16 Main connection size							
	L	D	D1	D2	b	f	H	n-ϕd
15	140	95	65	45	16	2	233	4-ϕ14
20	152	105	75	58	18	2	233	4-ϕ14
25	210	115	85	68	18	2	284	4-ϕ14
32	230	140	100	78	18	2	326	4-ϕ18
40	240	150	110	88	18	3	366	4-ϕ18
50	250	165	125	102	20	3	394	4-ϕ18
PN 25								
15	140	95	65	45	16	2	233	4-ϕ14
20	152	105	75	58	18	2	233	4-ϕ14
25	210	115	85	68	18	2	284	4-ϕ14
32	230	140	100	78	18	2	326	4-ϕ18
40	240	150	110	88	18	3	366	4-ϕ18
50	250	165	125	102	20	3	394	4-ϕ18
PN 40								
15	140	95	65	45	16	2	233	4-ϕ14
20	152	105	75	58	18	2	233	4-ϕ14
25	210	115	85	68	18	2	284	4-ϕ14
32	230	140	100	78	18	2	326	4-ϕ18
40	240	150	110	88	18	3	366	4-ϕ18
50	250	165	125	102	20	3	394	4-ϕ18

MAIN PARTS MATERIALS

NO.	Part name	Material
1	Body	A105N、F304、F316
2	Seat	S.S304、Stellite
3	Disc	A105N+2Cr13/304
4	Stem	2Cr13、F304、F316
5	Bellow assembly	S.S304、S.S316
6	Composite gasket	Flexible graphite+stainless steel
7	Packing	Flexible graphite
8	Bolt	A193-B7、A193-B8、A193-B8M
9	Pin	45#、F304、F316
10	Jack Bolt	A193-B7、A193-B8、A193-B8M
11	Stem nut	A194-2H、A194-8、A194-8
12	Packing bushing	2Cr13、F304、F316
13	Packing gland	A105N、F304、F316
14	Stem nut	Copper alloy、D2
15	Handwheel	A105N
16	Cap	45#
17	Cover	A105N、F304、F316

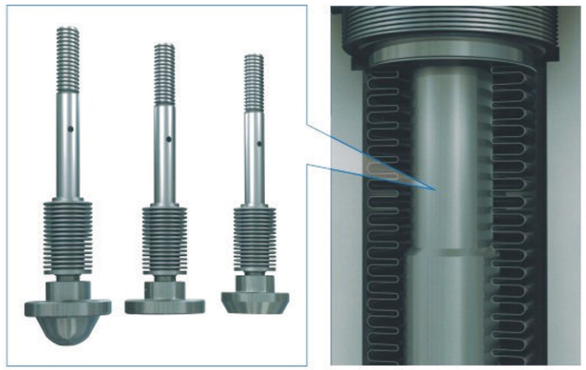

Royale Valve

Y TYPE S PATTERN BELLOW SEALED VALVE

APPLICATION:

Hot oil system, steam system, hot and cold water system etc.

PRODUCT MAIN ADVANTAGE:

1. Bellow seal element. The key part of bellow sealed globe valves is metal bellow. It is the connection between cover and stem with automatic roll welding. The metal bellow can keep the stem part no leakage.
2. Benefit from the cone and streamline shape design, the disc has a reliable seal and longer service life.
3. Double seal design(bellows+packing). Bellow and packing can protect against leakage and provide a excellent seal.
4. Grease nipple. It can direct lubricate the stem, nut and sleeve.
5. Ergonomic hand wheel. It provide longer service life and easier operation.

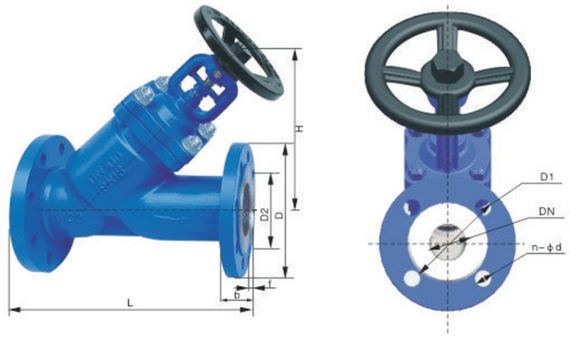

STANDARD

Design standard: DIN 3356
Face to face dimension: DIN 3202
Flanged ends: DIN 2543–2545
Test & inspection: DIN 3230

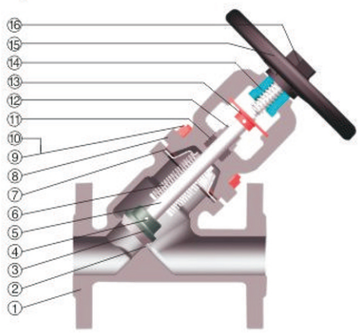

MAIN CONNECTION SIZE

DN	PN 16 Main connection size							
	L	D	D1	D2	b	f	n-φd	Kv(m³/h)
15	130	95	65	45	16	2	4-φ14	5.7
20	150	105	75	58	18	2	4-φ14	6.8
25	160	115	85	68	18	2	4-φ14	12.7
32	180	140	100	78	18	2	4-φ18	16.8
40	200	150	110	88	18	3	4-φ18	35.5
50	230	165	125	102	20	3	4-φ18	47.7
65	290	185	145	122	20	3	4-φ18	77
80	310	200	160	138	20	3	8-φ18	107
100	350	220	180	158	20	3	8-φ18	174
125	400	250	210	188	22	3	8-φ18	279
150	480	285	240	212	22	3	8-φ22	406
200	600	340	295	268	24	3	12-φ22	700
250	730	405	355	320	26	3	12-φ26	1272
300	850	460	410	378	28	4	12-φ26	1817
350	980	520	470	438	30	4	16-φ26	–
400	1100	580	525	490	32	4	16-φ30	–
PN 25								
15	130	95	65	45	16	2	4-φ14	5.7
20	150	105	75	58	18	2	4-φ14	6.8
25	160	115	85	68	18	2	4-φ14	12.7
32	180	140	100	78	18	2	4-φ18	16.8
40	200	150	110	88	18	3	4-φ18	35.5
50	230	165	125	102	20	3	4-φ18	47.7
65	290	185	145	122	22	3	8-φ18	77
80	310	200	160	138	24	3	8-φ18	107
100	350	235	190	162	24	3	8-φ22	174
125	400	270	220	188	26	3	8-φ26	279
150	480	300	250	218	28	3	8-φ26	406
200	600	360	310	278	30	3	12-φ26	700
250	730	425	370	335	32	3	12-φ30	1272
300	850	485	430	395	34	4	16-φ30	1817
350	980	555	490	450	38	4	16-φ33	–
400	1100	620	550	505	40	4	16-φ36	–
PN 40								
15	130	95	65	45	16	2	4-φ14	5.7
20	150	105	75	58	18	2	4-φ14	6.8
25	160	115	85	68	18	2	4-φ14	12.7
32	180	140	100	78	18	2	4-φ18	16.8
40	200	150	110	88	18	3	4-φ18	35.5
50	230	165	125	102	20	3	4-φ18	47.7
65	290	185	145	122	22	3	8-φ18	77
80	310	200	160	138	24	3	8-φ18	107
100	350	235	190	162	24	3	8-φ22	174
125	400	270	220	188	26	3	8-φ26	279
150	480	300	250	218	28	3	8-φ26	406
200	600	375	320	285	34	3	12-φ30	700
250	730	450	385	345	38	3	12-φ33	1272
300	850	515	450	410	42	4	16-φ33	1817
350	980	580	510	465	46	4	16-φ36	–
400	1100	660	585	535	50	4	16-φ39	–

MAIN PARTS MATERIALS

NO.	Part name	Material
1	Body	1.0619、1.4301、1.4401
2	Seat	1.4301、Stellite
3	Disc	1.4021、1.4401
4	Pin	1.4301、1.4401
5	Stem	1.4201、1.4401
6	Bellows	1.4021、1.4401
7	Gasket	Stainless+Flexible graphite
8	Cover	1.0619、1.4301、1.4401
9	Hex nuts	ASTM 194-2H、A194-8
10	Stud	ASTM 193-B7、A194-B8
11	Packing	Flexible graphite
12	Platen	1C25、1.4401
13	Stem guide	1C25
14	Stem nut	Copper alloy、D2、BL-2
15	Handwheel	Carbon steel
16	Locknut	1C45

ANGLE L PATTERN BELLOW SEALED GLOBE VALVE

Royale Valve

APPLICATION:

Hot oil system, steam system, hot and cold water system etc.

PRODUCT MAIN ADVANTAGE:

1. Bellow seal element. The key part of bellow sealed globe valves is metal bellow. It is the connection between cover and stem with automatic roll welding. The metal bellow can keep the stem part no leakage.
2. Benefit from the cone and streamline shape design, the disc has a reliable seal and longer service life.
3. Double seal design(bellows+packing). Bellow and packing can protect against leakage and provide a excellent seal.
4. Grease nipple. It can direct lubricate the stem, nut and sleeve.
5. Ergonomic handwheel. It provide longer service life and easier operation.

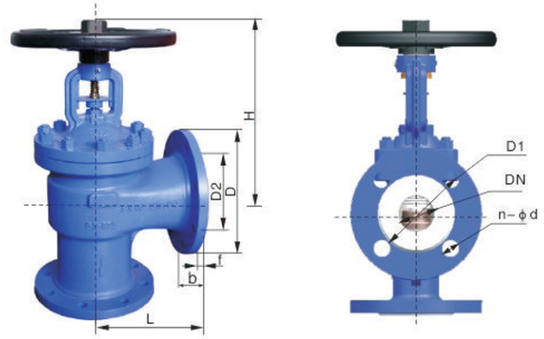

STANDARD

Design standard: DIN 3356
Face to face dimension: DIN 3202
Flanged ends: DIN 2543–2545
Test & inspection: DIN 3230

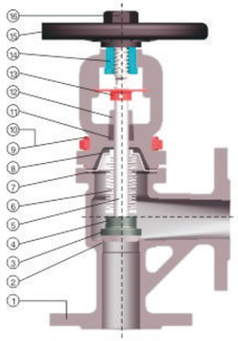

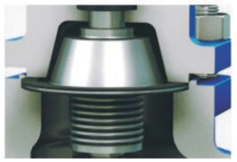

MAIN PARTS MATERIALS

NO.	Part name	Material
1	Body	1.0619、1.4301、1.4401
2	Seat	1.4301、Stellite
3	Disc	1.4021、1.4401
4	Pin	1.4301、1.4401
5	Bellows	1.4021、1.4401
6	Stem	1.4201、1.4401
7	Gasket	Stainless+Flexible graphite
8	Cover	1.0619、1.4301、、1.4401
9	Hex nuts	ASTM 194-2H、A194-8
10	Stud	ASTM 193-B7、A194-B8
11	Packing	Flexible graphite
12	Platen	1C25、1.4401
13	Stem guide	1C25
14	Stem nut	Copper alloy、D2、BL-2
15	Handwheel	Carbon steel
16	Locknut	1C45

MAIN CONNECTION SIZE

DN	PN 16 Main connection size						
	L	D	D1	D2	b	f	n-φd
15	90	95	65	45	16	2	4-φ14
20	95	105	75	58	18	2	4-φ14
25	100	115	85	68	18	2	4-φ14
32	105	140	100	78	18	2	4-φ18
40	115	150	110	88	18	3	4-φ18
50	125	165	125	102	20	3	4-φ18
65	145	185	145	122	20	3	4-φ18
80	155	200	160	138	20	3	8-φ18
100	175	220	180	158	20	3	8-φ18
125	200	250	210	188	22	3	8-φ18
150	225	285	240	212	22	3	8-φ22
200	275	340	295	268	24	3	12-φ22
250	325	405	355	320	26	3	12-φ26
300	375	460	410	378	28	4	12-φ26
350	425	520	470	438	30	4	16-φ26
400	475	580	525	490	32	4	16-φ30
PN 25							
15	90	95	65	45	16	2	4-φ14
20	95	105	75	58	18	2	4-φ14
25	100	115	85	68	18	2	4-φ14
32	105	140	100	78	18	2	4-φ18
40	115	150	110	88	18	3	4-φ18
50	125	165	125	102	20	3	4-φ18
65	145	185	145	122	22	3	8-φ18
80	155	200	160	138	24	3	8-φ18
100	175	235	190	162	24	3	8-φ22
125	200	270	220	188	26	3	8-φ26
150	225	300	250	218	28	3	8-φ26
200	275	360	310	278	30	3	12-φ26
250	325	425	370	335	32	3	12-φ30
300	375	485	430	395	34	4	16-φ30
350	425	555	490	450	38	4	16-φ33
400	475	620	550	505	40	4	16-φ36
PN 40							
15	90	95	65	45	16	2	4-φ14
20	95	105	75	58	18	2	4-φ14
25	100	115	85	68	18	2	4-φ14
32	105	140	100	78	18	2	4-φ18
40	115	150	110	88	18	3	4-φ18
50	125	165	125	102	20	3	4-φ18
65	145	185	145	122	22	3	8-φ18
80	155	200	160	138	24	3	8-φ18
100	175	235	190	162	24	3	8-φ22
125	200	270	220	188	26	3	8-φ26
150	225	300	250	218	28	3	8-φ26
200	275	375	320	285	34	3	12-φ30
250	325	450	385	345	38	3	12-φ33
300	375	515	450	410	42	4	16-φ33
350	425	580	510	465	46	4	16-φ36
400	475	660	585	535	50	4	16-φ39

Royale Valve

DIN STANDARD GLOBE VALVE

APPLICATION:

Petroleum, chemical industry, pharmacy, fertilizer, power industry etc.

PRODUCT MAIN ADVANTAGE:

1.Benefit from the cone and streamline shape design, the disc has a reliable seal and longer service life.
2.Grease nipple. It can direct lubricate the stem, nut and sleeve.
3.Ergonomic handwheel. It provide longer service life and easier operation.
4. Heat-treatment and nitrogen treatment. After these measures, the stem will have the function of corrosion-resistance and friction-resistance.

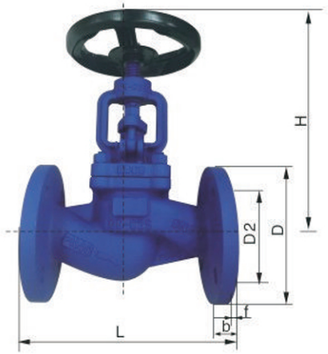

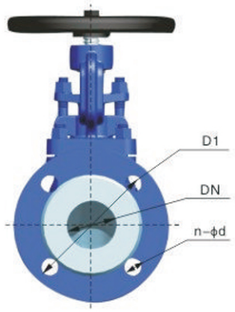

STANDARD

Design standard: DIN 3356
Face to face dimension: DIN 3202
Flanged ends: DIN 2543-2546
Test & inspection: DIN 3230

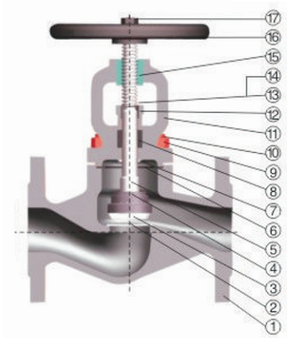

MAIN CONNECTION SIZE

DN	Main connection size								
	L	D	D1	D2	b	f	H	n-ϕd	Kv(m³/h)
PN 16									
15	130	95	65	45	16	2	181	4-ϕ14	5.3
20	150	105	75	58	18	2	181	4-ϕ14	7.2
25	160	115	85	68	18	2	195	4-ϕ14	12
32	180	140	100	78	18	2	215	4-ϕ18	16
40	200	150	110	88	18	3	220	4-ϕ18	28.5
50	230	165	125	102	20	3	225	4-ϕ18	43
65	290	185	145	122	20	3	260	4-ϕ18	75
80	310	200	160	138	20	3	275	8-ϕ18	105
100	350	220	180	158	20	3	335	8-ϕ18	173
125	400	250	210	188	22	3	390	8-ϕ18	288
150	480	285	240	212	22	3	405	8-ϕ22	410
200	600	340	295	268	24	3	520	12-ϕ22	725
250	730	405	355	320	26	3	610	12-ϕ26	1145
300	850	460	410	378	28	4	660	12-ϕ26	1635
350	980	520	470	438	30	4	970	16-ϕ26	2220
400	1100	580	525	490	32	4	1055	16-ϕ30	3180
PN 25									
15	130	95	65	45	16	2	181	4-ϕ14	5.3
20	150	105	75	58	18	2	181	4-ϕ14	7.2
25	160	115	85	68	18	2	195	4-ϕ14	12
32	180	140	100	78	18	2	215	4-ϕ18	16
40	200	150	110	88	18	3	220	4-ϕ18	28.5
50	230	165	125	102	20	3	225	4-ϕ18	43
65	290	185	145	122	22	3	260	8-ϕ18	75
80	310	200	160	138	24	3	275	8-ϕ18	105
100	350	235	190	162	24	3	335	8-ϕ22	173
125	400	270	220	188	26	3	390	8-ϕ26	288
150	480	300	250	218	28	3	405	8-ϕ26	410
200	600	360	310	278	30	3	520	12-ϕ26	725
250	730	425	370	335	32	3	610	12-ϕ30	1145
300	850	485	430	395	34	4	660	16-ϕ30	1635
350	980	555	490	450	38	4	970	16-ϕ33	2220
400	1100	620	550	505	40	4	1055	16-ϕ36	3180
PN 40									
15	130	95	65	45	16	2	181	4-ϕ14	5.3
20	150	105	75	58	18	2	181	4-ϕ14	7.2
25	160	115	85	68	18	2	195	4-ϕ14	12
32	180	140	100	78	18	2	215	4-ϕ18	16
40	200	150	110	88	18	3	220	4-ϕ18	28.5
50	230	165	125	102	20	3	225	4-ϕ18	43
65	290	185	145	122	22	3	260	8-ϕ18	75
80	310	200	160	138	24	3	275	8-ϕ18	105
100	350	235	190	162	24	3	335	8-ϕ22	173
125	400	270	220	188	26	3	390	8-ϕ26	288
150	480	300	250	218	28	3	405	8-ϕ26	410
200	600	375	320	285	34	3	520	12-ϕ30	725
250	730	450	385	345	38	3	610	12-ϕ33	1145
300	850	515	450	410	42	4	660	16-ϕ33	1635
350	980	580	510	465	46	4	970	16-ϕ36	2220
400	1100	660	585	535	50	4	1055	16-ϕ39	3180

MAIN PARTS MATERIALS

NO.	Part name	Material
1	Body	1.0619、1.4301、1.4401
2	Seat	1.4301、Stellite
3	Disc	1.4021、1.4301+Stellite
4	Cap	1C45、1.4301、1.4401
5	Stem	1.4021、1.4301、1.4401
6	Metal Gasket	Stainless steel
7	Back seal	1.4021、1.4301
8	Packing	Flexible graphite
9	Nut	ASTM A194-2H 、A194-8
10	Double-headed Bolt	ASTM A193-B7、A193-B8
11	Cover	1.0619、1.4301、1.4401
12	Gland	1.0619、1.4301
13	Jack Bolt	ASTM A193-B7、A193-B8
14	Nut	ASTM A194-2H 、A194-8
15	Stem nut	Copper alloy 、D2、BL2
16	Handwheel	Carbon steel
17	Nut	A194-2H 、A194-8

Royale Valve

ANSI STANDARD BELLOW SEALED GATE VALVE

APPLICATION:

Hot oil system, steam system, hot and cold water system etc.

PRODUCT MAIN ADVANTAGE:

1.Bellow seal element. The key part of bellow sealed gate valves is metal bellow. It is the connection between cover and stem with automatic roll welding. The metal bellow can keep the stem part no leakage.
2.Double seal design(bellows+packing). Bellow and packing can protect against leakage and provide a excellent seal.
3.Grease nipple. It can direct lubricate the stem, nut and sleeve.
4.Ergonomic handwheel. It provide longer service life and easier operation.

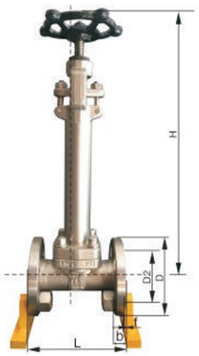

STANDARD

Design: API600/API6D
Face to face: ASME B 16.10
Flange: ASME B 16.5
Bellows: MSS-SP 117
BW-ends: ASME B 16.25
Pressure test: API598

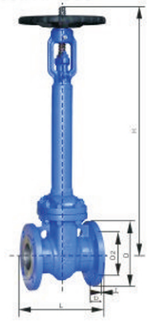

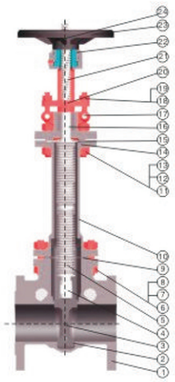

MAIN PARTS MATERIALS

NO.	Part name	Material
1	Body	WCB、CF8、CF8M
2	Seat	304、Stellite
3	Disc	WCB+13Cr、CF8、CF8M
4	Stem	13Cr、F304、F316
5	Bellows	S.S304、S.S316L
6	Screw nut	ASTMA194-2H、A194-8、A194-8M
7	Stud	ASTMA193-B7、A193-B8、A193-B8M
8	Nut	ASTMA194-2H、A194-8、A194-8M
9	Metal gasket	Stainless+Flexible graphite
10	Yoke	WCB、CF8、CF8M
11	Nut	ASTMA194-2H、A194-8、A194-8M
12	Stud	ASTMA193-B7、A193-B8、A193-B8M
13	Nut	ASTMA194-2H、A194-8、A194-8M
14	Gasket	Stainless+Flexible graphite
15	Seal bowl	S.S304、S.S316
16	Packing	Flexible graphite
17	Extremely heavy pin	1045、S.S304、S.S316
18	Extremely heavy bolt	ASTMA193-B7、A193-B8、A193-B8
19	Extremely heavy nut	ASTMA194-2H、A194-8、A194-8M
20	Gland	WCB、CF8
21	Stem nut	Copper alloy、D2、BL-2
22	Bearing nut	1405、S.S304、S.S316
23	Handwheel	60-40-18
24	Locknut	1045

MAIN CONNECTION SIZE

Material	DN	Main connection size						
		L	D	D1	D2	b	f	n-ϕd
150 LB								
A105	1/2"	108	90	60.5	35	10	2	4-ϕ16
	3/4"	117	100	70	43	11	2	4-ϕ16
	1"	127	110	79.5	51	12	2	4-ϕ16
	1¹/4"	140	115	89	63.5	13	2	4-ϕ16
	1¹/2"	165	125	98.5	73	15	2	4-ϕ16
A105 WCB	2"	178	150	120.5	92	16	2	4-ϕ19
WCB	2¹/2"	190	180	139.5	105	18	2	4-ϕ19
	3"	203	190	152.5	127	20	2	4-ϕ19
	4"	229	230	190.5	157	24	2	8-ϕ19
	5"	254	255	216	186	24	2	8-ϕ22
	6"	267	280	241.5	216	26	2	8-ϕ22
	8"	292	345	298.5	270	29	2	8-ϕ22
	10"	330	405	362	324	31	2	12-ϕ25
	12"	356	485	432	381	32	2	12-ϕ25
	14"	381	535	476	413	35	2	12-ϕ29
	16"	406	595	540	470	37	2	16-ϕ29
	18"	432	635	578	533	40	2	12-ϕ32
	20"	457	700	625	584	43	2	20-ϕ32
300 LB								
A105	1/2"	140	95	66.5	35	15	2	4-ϕ16
	3/4"	152	115	82.5	43	16	2	4-ϕ19
	1"	165	125	89	51	18	2	4-ϕ19
	11/4"	178	135	98.5	63.5	20	2	4-ϕ19
	11/2"	190	155	114.5	73	21	2	4-ϕ22
A105 WCB	2"	216	165	127	92	23	2	8-ϕ19
WCB	21/2"	241	190	149	105	26	2	8-ϕ22
	3"	282	210	168.5	127	29	2	8-ϕ22
	4"	305	255	200	157	32	2	8-ϕ22
	6"	403	320	270	216	37	2	12-ϕ22
	8"	502	380	330	270	42	2	12-ϕ25
	10"	568	445	387	324	48	2	16-ϕ29
	12"	648	520	451	381	51	2	16-ϕ32
	14"	762	585	514.5	413	54	2	20-ϕ32
	16"	838	650	571.5	470	58	2	20-ϕ35
	18"	914	710	628.5	533	61	2	24-ϕ35
	20"	991	775	686	584	64	2	24-ϕ35

Royale Valve

DIN STANDARD Y TYPE STRAINER

STANDARD

Design standard: DIN 3356
Face to face dimension: DIN 3202
Flanged ends: DIN 2543–2545
Test & inspection: DIN 3230

ADVANTAGE

1.DIN Y type strainer is used to separate the impurity of media. It can protect other equipment for a regular service.
2.Stainless steel filter traps make a better performance and corrosion–resistance.
3.Maintenance is easy. All you need is just clean the filter traps.

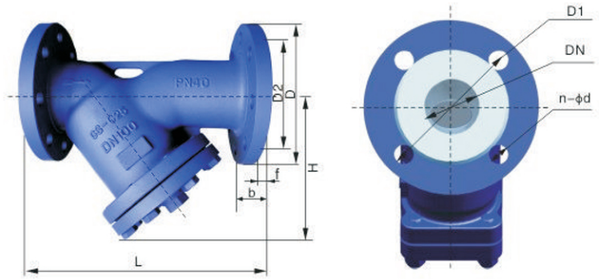

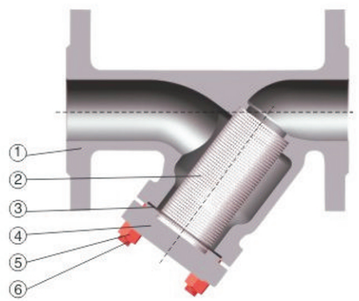

MAIN CONNECTION SIZE

DN	L	D	D1	D2	b	f	H	n–ϕd
PN 16								
	Main connection size							
15	130	95	65	45	16	2	85	4–ϕ14
20	150	105	75	58	18	2	95	4–ϕ14
25	160	115	85	68	18	2	110	4–ϕ14
32	180	140	100	78	18	2	125	4–ϕ18
40	200	150	110	88	18	3	145	4–ϕ18
50	230	165	125	102	20	3	155	4–ϕ18
65	290	185	145	122	20	3	175	4–ϕ18
80	310	200	160	138	20	3	210	8–ϕ18
100	350	220	180	158	20	3	230	8–ϕ18
125	400	250	210	188	22	3	270	8–ϕ18
150	480	285	240	212	22	3	300	8–ϕ22
200	600	340	295	268	24	3	385	12–ϕ22
250	730	405	355	320	26	3	535	12–ϕ26
300	850	460	410	378	28	4	680	12–ϕ26
PN 25								
15	130	95	65	45	16	2	85	4–ϕ14
20	150	105	75	58	18	2	95	4–ϕ14
25	160	115	85	68	18	2	110	4–ϕ14
32	180	140	100	78	18	2	125	4–ϕ18
40	200	150	110	88	18	3	145	4–ϕ18
50	230	165	125	102	20	3	155	4–ϕ18
65	290	185	145	122	22	3	175	8–ϕ18
80	310	200	160	138	24	3	210	8–ϕ18
100	350	235	190	162	24	3	230	8–ϕ22
125	400	270	220	188	26	3	270	8–ϕ26
150	480	300	250	218	28	3	300	8–ϕ26
200	600	360	310	278	30	3	385	12–ϕ26
250	730	425	370	335	32	3	535	12–ϕ30
300	850	485	430	395	34	4	680	16–ϕ30
PN 40								
15	130	95	65	45	16	2	85	4–ϕ14
20	150	105	75	58	18	2	95	4–ϕ14
25	160	115	85	68	18	2	110	4–ϕ14
32	180	140	100	78	18	2	125	4–ϕ18
40	200	150	110	88	18	3	145	4–ϕ18
50	230	165	125	102	20	3	155	4–ϕ18
65	290	185	145	122	22	3	175	8–ϕ18
80	310	200	160	138	24	3	210	8–ϕ18
100	350	235	190	162	24	3	230	8–ϕ22
125	400	270	220	188	26	3	270	8–ϕ26
150	480	300	250	218	28	3	300	8–ϕ26
200	600	375	320	285	34	3	385	12–ϕ30
250	730	450	385	345	38	3	535	12–ϕ33
300	850	515	450	410	42	4	680	16–ϕ33

MAIN PARTS MATERIALS

NO.	Part name	Material
1	Body	1.0619、1.4301、1.4401
2	Filter net	1.4301、1.4401
3	Metal gasket	Stainless steel
4	Cover	1.0619、1.4301、1.4401
5	Nut	ASTM A194–2H 、A194–8
6	Double–headed Bolt	ASTM A193–B7、A193–B8

SCREENS MESH FORM

Water Media	20–40 Mesh
Gas Media	40–100 Mesh
Oil Media	10–120 Mesh

DIN STANDARD CHECK VALVE

Royale Valve

STANDARD

Design standard: DIN 3356
Face to face dimension: DIN 3202
Flanged ends: DIN 2543–2546
Test & inspection: DIN 3230

ADVANTAGE

1.DIN lift check valve is self–sealing valve. The disc can be acted by the flow which can protect against the media flow back.
2.The disc with spring can keep the valve work in any direction.
3.Reasonable structure, reliable sealing, excellent performance and attractive appearance make a valve.

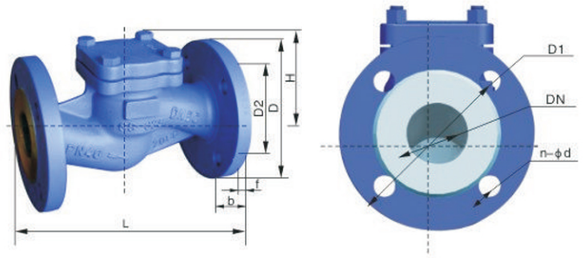

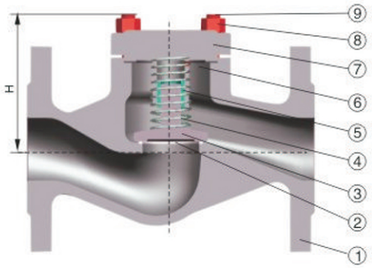

STANDARD

NO.	Part name	Material
1	Body	1.0619、1.4301、1.4401
2	Seat	1.4301、Stellite
3	Disc	1.4021、1.4301+Stellite
4	Spring	1.4301、1.4401
5	Copper guide sleeve	Copper alloy 、D2、BL2
6	Metal Gasket	Stainless steel
7	Cover	1.0619、1.4301、1.4401
8	Nut	ASTM A194–2H 、A194–8
9	Double–headed Bolt	ASTM A193–B7、A193–B8

MAIN CONNECTION SIZE

DN	L	D	D1	D2	b	f	H	n–ϕd	Kv(m³/h)
PN 16									
	Main connection size								
15	130	95	65	45	16	2	65	4–ϕ14	5.3
20	150	105	75	58	18	2	70	4–ϕ14	7.2
25	160	115	85	68	18	2	80	4–ϕ14	12
32	180	140	100	78	18	2	85	4–ϕ18	16
40	200	150	110	88	18	3	90	4–ϕ18	28.5
50	230	165	125	102	20	3	95	4–ϕ18	43
65	290	185	145	122	20	3	110	4–ϕ18	75
80	310	200	160	138	20	3	130	8–ϕ18	105
100	350	220	180	158	20	3	155	8–ϕ18	173
125	400	250	210	188	22	3	165	8–ϕ18	288
150	480	285	240	212	22	3	215	8–ϕ22	410
200	600	340	295	268	24	3	280	12–ϕ22	725
250	730	405	355	320	26	3	305	12–ϕ26	1145
300	850	460	410	378	28	4	330	12–ϕ26	1635
350	980	520	470	438	30	4	390	16–ϕ26	2220
400	1100	580	525	490	32	4	470	16–ϕ30	3180
PN 25									
15	130	95	65	45	16	2	65	4–ϕ14	5.3
20	150	105	75	58	18	2	70	4–ϕ14	7.2
25	160	115	85	68	18	2	80	4–ϕ14	12
32	180	140	100	78	18	2	85	4–ϕ18	16
40	200	150	110	88	18	3	90	4–ϕ18	28.5
50	230	165	125	102	20	3	95	4–ϕ18	43
65	290	185	145	122	22	3	110	8–ϕ18	75
80	310	200	160	138	24	3	130	8–ϕ18	105
100	350	235	190	162	24	3	155	8–ϕ22	173
125	400	270	220	188	26	3	165	8–ϕ26	288
150	480	300	250	218	28	3	215	8–ϕ26	410
200	600	360	310	278	30	3	280	12–ϕ26	725
250	730	425	370	335	32	3	305	12–ϕ30	1145
300	850	485	430	395	34	4	330	16–ϕ30	1635
350	980	555	490	450	38	4	390	16–ϕ33	2220
400	1100	620	550	505	40	4	470	16–ϕ36	3180
PN 40									
15	130	95	65	45	16	2	65	4–ϕ14	5.3
20	150	105	75	58	18	2	70	4–ϕ14	7.2
25	160	115	85	68	18	2	80	4–ϕ14	12
32	180	140	100	78	18	2	85	4–ϕ18	16
40	200	150	110	88	18	3	90	4–ϕ18	28.5
50	230	165	125	102	20	3	95	4–ϕ18	43
65	290	185	145	122	22	3	110	8–ϕ18	75
80	310	200	160	138	24	3	130	8–ϕ18	105
100	350	235	190	162	24	3	155	8–ϕ22	173
125	400	270	220	188	26	3	165	8–ϕ26	288
150	480	300	250	218	28	3	215	8–ϕ26	410
200	600	375	320	285	34	3	280	12–ϕ30	725
250	730	450	385	345	38	3	305	12–ϕ33	1145
300	850	515	450	410	42	4	330	16–ϕ33	1635
350	980	580	510	465	46	4	390	16–ϕ36	2220
400	1100	660	585	535	50	4	470	16–ϕ39	3180

Royale Valve

CHLORINE-SPECIFIC VALVE

APPLICATION:

Chlorine, liquid chlorine, alkali, ammonia, hydrogen, nitrogen.

PRODUCT MAIN ADVANTAGE:

1. With corrosion resistant steel casting body, it can be applied in transportation of chlorine, liquid chlorine. It has a good performance in corrosion resistance.
2. Benefit from automatic sealing compensation ,it has a good sealing performance and with no adhesion and abrade.
3. The up sealing with multilayer PTFE design can ensure the packing with no leakage.

STANDARD

Design standard: DIN 3356
Face to face dimension: DIN 3202
Flanged ends: DIN 2543–2545
Test & inspection: DIN 3230

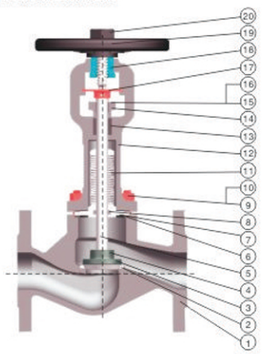

MAIN PARTS MATERIALS

NO.	Part name	Material
1	Body	Corrosion Resistant Steel
2	Seat	STELLITE.PTFE
3	Disc	F316L
4	Pin	S.S316L
5	Stem	F316L
6	Gasket	PTFE.Flexible graphite + stainless steel
7	Seal bowl	1.4301.1.4401
8	Seal element	Titanium
9	Stud	ASTM 193–B7 .193–B8
10	Hex nuts	ASTM 194–2H.194–8
11	Bellows	316L.H–C276
12	Cover	LF2.LCB.CF3M
13	Packing	Flexible graphite. PTFE
14	Platen	LCB.CF3M
15	Extremely heavy bolt	ASTM 193–B7 .193–B8
16	Hex nuts	ASTM 194–2H.194–8
17	Stem guide	45#
18	Stem nut	Copper alloy.D2. BL–2
19	Handwheel	Carbon steel
20	Locknut	45#

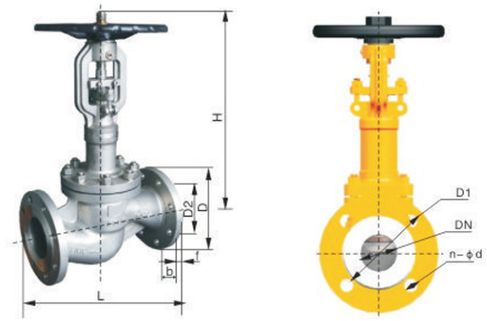

MAIN CONNECTION SIZE

DN	Main connection size							
	L	D	D1	D2	b	f	H	n–ϕd
PN 16								
15	130	95	65	45	16	2	205	4–ϕ14
20	150	105	75	58	18	2	205	4–ϕ14
25	160	115	85	68	18	2	217	4–ϕ14
32	180	140	100	78	18	2	230	4–ϕ18
40	200	150	110	88	18	3	235	4–ϕ18
50	230	165	125	102	20	3	240	4–ϕ18
65	290	185	145	122	20	3	285	4–ϕ18
80	310	200	160	138	20	3	310	8–ϕ18
100	350	220	180	158	20	3	370	8–ϕ18
125	400	250	210	188	22	3	430	8–ϕ18
150	480	285	240	212	22	3	445	8–ϕ22
200	600	340	295	268	24	3	560	12–ϕ22
250	730	405	355	320	26	3	665	12–ϕ26
300	850	460	410	378	28	4	720	12–ϕ26
350	980	520	470	438	30	4	970	16–ϕ26
400	1100	580	525	490	32	4	1055	16–ϕ30
PN 25								
15	130	95	65	45	16	2	205	4–ϕ14
20	150	105	75	58	18	2	205	4–ϕ14
25	160	115	85	68	18	2	217	4–ϕ14
32	180	140	100	78	18	2	230	4–ϕ18
40	200	150	110	88	18	3	235	4–ϕ18
50	230	165	125	102	20	3	240	4–ϕ18
65	290	185	145	122	22	3	285	8–ϕ18
80	310	200	160	138	24	3	310	8–ϕ18
100	350	235	190	162	24	3	370	8–ϕ22
125	400	270	220	188	26	3	430	8–ϕ26
150	480	300	250	218	28	3	445	8–ϕ26
200	600	360	310	278	30	3	560	12–ϕ26
250	730	425	370	335	32	3	665	12–ϕ30
300	850	485	430	395	34	4	720	16–ϕ30
350	980	555	490	450	38	4	970	16–ϕ33
400	1100	620	550	505	40	4	1055	16–ϕ36
PN 40								
15	130	95	65	45	16	2	205	4–ϕ14
20	150	105	75	58	18	2	205	4–ϕ14
25	160	115	85	68	18	2	217	4–ϕ14
32	180	140	100	78	18	2	230	4–ϕ18
40	200	150	110	88	18	3	235	4–ϕ18
50	230	165	125	102	20	3	240	4–ϕ18
65	290	185	145	122	22	3	285	8–ϕ18
80	310	200	160	138	24	3	310	8–ϕ18
100	350	235	190	162	24	3	370	8–ϕ22
125	400	270	220	188	26	3	430	8–ϕ26
150	480	300	250	218	28	3	445	8–ϕ26
200	600	375	320	285	34	3	560	12–ϕ30
250	730	450	385	345	38	3	665	12–ϕ33
300	850	515	450	410	42	4	720	16–ϕ33
350	980	580	510	465	46	4	970	16–ϕ36
400	1100	660	585	535	50	4	1055	16–ϕ39

DIN STANDARD GATE VALVE

Royale Valve

STANDARD

Design standard: DIN 3352
Face to face dimension: DIN 3202
Flanged ends: DIN 2543–2545
Test & inspection: DIN 3230

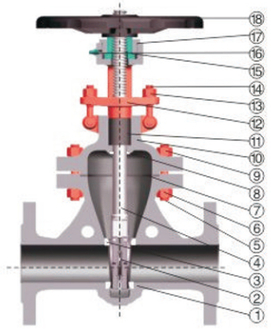

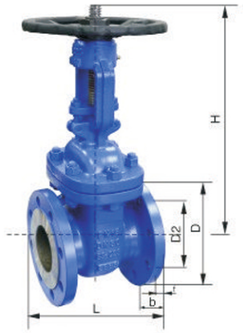

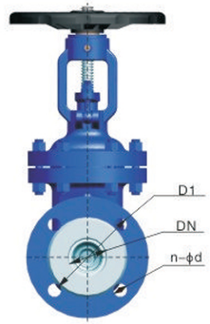

MAIN PARTS MATERIALS

NO.	Part name	Material
1	Body	1.0619、1.4301、1.4401
2	Disc	1.0619、1.4201/1.4301
3	Seat	1.4301、Stellite
4	Stem	1.4021、1.4301、1.4401
5	Double–headed Bolt	ASTM A193–B7、A193–B8
6	Nut	ASTM A194–2H 、A194–8
7	Metal Gasket	Stainless steel
8	Back Seal	1.4021、1.4301
9	Nut	ASTM A194–2H 、A194–8
10	Cover	1.0619、1.4301、1.4401
11	Packing	Flexible graphite
12	Gland	1.0619、1.4301
13	Nut	ASTM A194–2H 、A194–8
14	Jack Bolt	ASTM A193–B7、A193–B8
15	Stem nut	Copper alloy 、D2、BL2
16	Oil Cup	Assemble
17	Cap	1C45、1.4301、1.4401
18	Handwheel	Carbon steel

MAIN CONNECTION SIZE

DN	Main connection size							
	L	D	D1	D2	B	F	H	n–ϕd
PN16								
40	240	150	110	88	18	3	305	4–ϕ18
50	250	165	125	102	20	3	344	4–ϕ18
65	270	185	145	122	20	3	377	4–ϕ18
80	280	200	160	138	20	3	415	8–ϕ18
100	300	220	180	158	20	3	473	8–ϕ18
125	325	250	210	188	22	3	505	8–ϕ18
150	350	285	240	212	22	3	550	8–ϕ22
200	400	340	295	268	24	3	815	12–ϕ22
250	450	405	355	320	26	3	969	12–ϕ26
300	500	460	410	378	28	4	1145	12–ϕ26
350	550	520	470	438	30	4	1300	16–ϕ26
400	600	580	525	490	32	4	1450	16–ϕ30
450	650	640	585	548	34	4	1597	20–ϕ30
500	700	715	650	610	36	4	1755	20–ϕ33
600	800	840	770	725	40	5	1985	20–ϕ36
PN25								
40	240	150	110	88	18	3	305	4–ϕ18
50	250	165	125	102	20	3	344	4–ϕ18
65	270	185	145	122	22	3	377	8–ϕ18
80	280	200	160	138	24	3	415	8–ϕ18
100	300	235	190	162	24	3	473	8–ϕ22
125	325	270	220	188	26	3	505	8–ϕ26
150	350	300	250	218	28	3	550	8–ϕ26
200	400	360	310	278	30	3	815	12–ϕ26
250	450	425	370	335	32	3	969	12–ϕ30
300	500	485	430	395	34	4	1145	16–ϕ30
350	550	555	490	450	38	4	1300	16–ϕ33
400	600	620	550	505	40	4	1450	16–ϕ36
450	650	670	600	548	42	4	1597	20–ϕ36
500	700	730	660	566	44	4	1755	20–ϕ36
600	800	845	770	670	46	5	1985	20–ϕ39
PN40								
40	240	150	110	88	18	3	305	4–ϕ18
50	250	165	125	102	20	3	344	4–ϕ18
65	270	185	145	122	22	3	377	8–ϕ18
80	280	200	160	138	24	3	415	8–ϕ18
100	300	235	190	162	24	3	473	8–ϕ22
125	325	270	220	188	26	3	505	8–ϕ26
150	350	300	250	218	28	3	550	8–ϕ26
200	400	375	320	285	34	3	815	12–ϕ30
250	450	450	385	345	38	3	969	12–ϕ33
300	500	515	450	410	42	4	1145	16–ϕ33
350	550	580	510	465	46	4	1300	16–ϕ36
400	600	660	585	535	50	4	1450	16–ϕ39
450	650	685	610	560	50	4	1597	20–ϕ39
500	700	755	670	615	52	4	1755	20–ϕ42
600	800	890	795	735	60	5	1985	20–ϕ48

Royale Valve

DIN STANDARD SAFETY VALVE






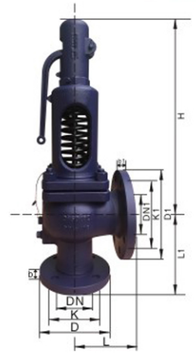

STANDARD

Design standard：DIN 3320
Face to face dimension：DIN 3202
Flange standard：DIN 2543–2545
Test & inspection：DIN 3230

MATERIAL

Ref No.	Part Name	Materials
1	Nozzle	2Cr13+STL
2	Body	GS–C25
3	Adjusting ring	2Cr13
4	Disc	2Cr13+STL
5	Disc holder	2Cr13
6	Guide	2Cr13
7	Stem	2Cr13
8	Spring	50CrVA
9	Bonnet	GS–C25
10	Cap	GS–C25

MAIN PARTS MATERIALS

Model	35.901/902/911/912	55.901/911
Nominal pressure	PN40/16	PN40/16
Body material	Carbon Steel 1.0619+N	Stainless steel 1.4301/1.4401
Nominal diameter	DN20/32~DN150/20	DN20/32~DN100/150
Working temperature	–10℃~450℃	–60°C~400°C

DN	20 32	25 40	32 50	40 65	50 80	65 100	80 125	100 150	125 200	150 250
do(mm) Throughflow aperture	18	22	29	36	45	58	72	80	100	125
Ao(mm^2) Throughflow area	254	398	661	1018	1590	2688	4072	6362	8825	12266
Weight(Kg)	8.5	10	14	20	28	40	53	80	125	165

MAIN CONNECTION SIZE

DN × DN1		20 × 32	25 × 40	32 × 50	40 × 65	50 × 80	65 × 100	80 × 125	100 × 150	125 × 200	150 × 250
D	PN16	105	115	140	150	165	185	200	220	250	285
	PN40								235	220	300
K	PN16	75	85	100	110	125	145	160	180	210	240
	PN40								190	220	250
b		20	20	20	21	22	24	26	28	31	34
D1	PN16	140	150	165	1885	200	220	250	285	340	405
K1		100	110	125	145	160	180	210	240	295	355
b1		19	19	20	20	20	20	22	22	27	29
L		85	100	110	115	120	140	160	180	200	220
L1		95	105	115	140	150	170	195	220	250	285
≈H		298	311	315	355	405	555	580	690	845	890


JIS / DIN/GOST/ANSI SAFETY VALVE

Royale Valve


A41H


A42Y


A44Y


A47H/Y


A48H/Y

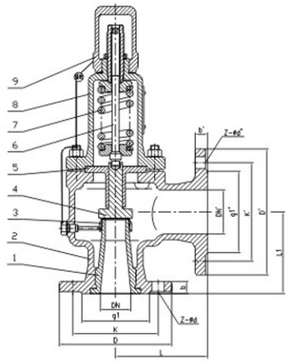

1.Safety valve can used for the temperaure ≤350℃ of Steam ,air,gas,water oil liquid etc.
2.Flange ends can customer requirement Acc. to DIN Standard/JIS Standard /ASME Standard/GOST Standard process.
3.Body mateiral can per medium to cast steel WCB/WC6/WC9 ,cast stainless steel 304 /316/316Ti/317 etc.
4.Paint color per customer requirement

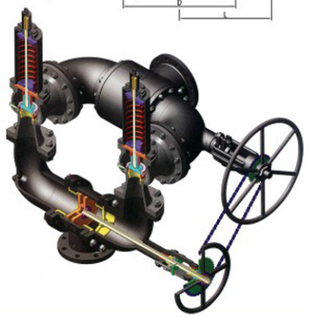

A41H/A47H TYPE MAIN DIMENSIONS(mm)

PN16–PN40,JIS1OK–20K,150LB–300LB FLANGE				
INLET	Do	OUTLET	L	L1
DN20	15	DN20	100	85
DN25	20	DN25	100	85
DN32	25	DN32	115	100
DN40	32	DN40	120	110
DN50	40	DN50	135	120
DN65	50	DN65	140	130
DN80	65	DN80	160	135
DN100	80	DN100	170	160
DN125	100	DN125	190	190
DN150	125	DN150	205	195
DN200	150	DN200	240	230
DN250	200	DN250	350	320

A42H/A44Y/A48H MAIN TYPE DIMENSIONS(mm)

PN16–PN40,JIS1OK–20K,150LB–300LB FLANGE				
INLET	Do	OUTLET	L	L1
DN20	15	DN25	110	95
DN25	16	DN32	110	95
DN32	20	DN40	115	100
DN40	25	DN50	120	110
DN50	32	DN65	135	120
DN65	40	DN80	160	140
DN80	50	DN100	170	135
DN100	65	DN125	205	160
DN125	80	DN150	210	190
DN150	100	DN175	255	230
DN200	125	DN250	305	260
DN250	150	DN300	350	320
DN300	200	DN400	370	350
DN350	250	DN500	375	415
DN400	280	DN500	500	450

A41Y/A47Y TYPE MAIN DIMENSIONS(mm)

PN64–PN100,JIS40K,600LB FLANGE				
SIZE	Do	DN	L	L1
DN20	15	DN20	100	95
DN25	20	DN25	100	95
DN32	25	DN32	115	105
DN40	32	DN40	135	115
DN50	40	DN50	160	130
DN65	50	DN65	175	160
DN80	65	DN80	175	160
DN100	80	DN100	190	180
DN150	100	DN150	280	260

A42Y/A44Y/A48Y MAIN TYPE DIMENSIONS(mm)

PN64–PN100,JIS40K,600LB FLANGE					
	SIZE	Do	DN	L	L1
PN64 JIS40K	DN20	12	DN25	110	100
	DN25	16	DN32	110	100
	DN32	20	DN40	130	110
	DN40	25	DN50	135	120
	DN50	32	DN65	160	130
	DN65	40	DN80	175	160
	DN80	50	DN100	175	160
	DN100	65	DN125	195	195
	DN150	100	DN200	285	260
PN100 600LB	DN20	12	DN25	110	100
	DN25	16	DN32	110	100
	DN32	20	DN40	130	110
	DN40	25	DN50	135	120
	DN50	32	DN65	160	130
	DN65	35	DN80	175	160
	DN80	40	DN100	175	160
	DN100	50	DN125	195	195
	DN150	80	DN200	285	260

Royale Valve

PILOT OPERATED PRESSURE REDUCING VALVE

DP 17

DP 27

25P

PRODUCT INTRODUCTION

This reducing valve is latest type pilot pressure reducing valve with mebrance. It is the modified form of normal pressure reducing valve. The mebrance of new material enlarging the working area, so the higher pressure can be fed back to the membrane , and adjust the main valve to maintain the constant pressure of lower pressure stream .

Advantage:1. Especially suitable for steam and water.

2. Max inlet pressure: 16 bar, 25 bar.

3.Outlet pressure (Springs pressure setting range)

Yellow:0.2 to 3 bar ; Blue:2.5 to 7 bar; Red:6 to 12 bar.

4. Diameter: 15–200 mm.

5. Media temperature: 0–285℃.

6. Max rate inlet pressure/outlet pressure: 20:1.

7. DIN, ANSI, GB.

MATERIAL OF MAIN COMPONENT

Name of component	Material
Valve body, valve cover	WCB
Valve seat	2Cr13
Valve flap	2Cr13
Valve rod	2Cr13
Membrane	Brass
Adjusting spring	60Si2Mn
Pressure Sensing pipe	Brass

MAIN CONNECTION SIZE

DN	PN16 Main connection size									
	L	H1	H	L1	D	D1	D2	b	f	n– ϕ d
DN15	147	235	145	185	95	65	45	16	2	4– ϕ 14
DN20	154	235	145	185	105	75	58	18	2	4– ϕ 14
DN25	160	235	145	207	115	85	68	18	2	4– ϕ 14
DN32	180	235	145	207	140	100	78	18	2	4– ϕ 18
DN40	200	240	180	255	150	110	88	18	3	4– ϕ 18
DN50	230	240	183	255	165	125	102	20	3	4– ϕ 18
DN65	250	295	200	320	185	145	122	20	3	4– ϕ 18
DN80	310	232	230	350	200	160	138	20	3	8– ϕ 18
DN100	350	320	240	380	220	180	158	20	3	8– ϕ 18
DN125	400	352	315	430	250	210	188	22	3	8– ϕ 18
DN150	450	364	334	455	285	240	212	22	3	8– ϕ 22
DN200	500	384	354	510	340	295	268	24	3	12– ϕ 22

DN	PN25 Main connection size									
	L	H1	H	L1	D	D1	D2	b	f	n– ϕ d
DN15	147	235	145	185	95	65	45	16	2	4– ϕ 14
DN20	154	235	145	185	105	75	58	18	2	4– ϕ 14
DN25	160	235	145	207	115	85	68	18	2	4– ϕ 14
DN32	180	235	145	207	140	100	78	18	2	4– ϕ 18
DN40	200	240	180	255	150	110	88	18	3	4– ϕ 18
DN50	230	240	183	255	165	125	102	20	3	4– ϕ 18
DN65	250	295	200	320	185	145	122	22	3	8– ϕ 18
DN80	310	232	230	350	200	160	138	24	3	8– ϕ 18
DN100	350	320	240	380	235	190	162	24	3	8– ϕ 22
DN125	400	352	315	430	270	220	188	26	3	8– ϕ 26
DN150	450	364	334	455	300	250	218	28	3	8– ϕ 26
DN200	500	384	354	510	360	310	278	30	3	12– ϕ 26

STEAM-WATER SEPARATOR

Royale Valve

CF41

CF11

AS–S7

PRODUCT INTRODUCTION

CF41, CF11 and AS–S7 gas and water separators make the steam and water apart through the abrupt change of the flow's direction. So the quality and efficiency of its operation will be improved.

Advantage: 1. Improve the dryness of the steam to improve the heating efficiency of the equipment and reduce the impact to the pipelines.

2. Prevent water beating. The condensed water will be discharged from the trap below the separator.

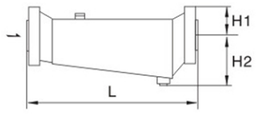

CF41

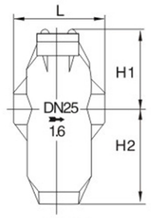

CF11

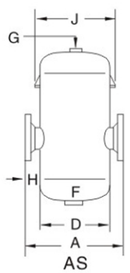

AS

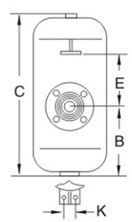

AS

MAIN CONNECTION SIZE

Model	Nominal diameter (DN)	Connection	Pressure range (Mpa)	Max allowable Temp. (°C)	External dimensions(mm)			
					L	H1	H2	D
CF11	15~20	Thread	0.01~2.5	350	130	115	156	Thread
	25				150	155	222	
CF41	20~32	Flange	0.01~2.5	350	320	65	100	Thread
CF41	40~50 65	Flange	0.01~2.5	350	460 490	80 90	260 275	Thread
CF41	80~100	Flange	0.01~2.5	350	510	110	190	Thread
CF41	125~150	Flange	0.01~2.5	350	590	145	200	Thread

MAIN CONNECTION SIZE

Size	Design pressure (Mpa)	External dimensions(mm)										Weight (kg)	Volume (L)
		A	B	C	D	E	F	G	H	J	K		
DN65	1.6	420	250	640	219	160	1"	3/4"	100	265	30	46.5	18
	2.5	420	250	640	219	160	1"	3/4"	100	265	30	49	18
DN80	1.6	525	330	735	273	145	2"	3/4"	125	370	30	80	33
	2.5	525	330	735	273	145	2"	3/4"	125	370	30	88	33
DN100	1.6	575	335	795	324	165	2"	3/4"	125	385	40	98	50
	2.5	575	335	795	324	165	2"	3/4"	125	385	40	106	50
DN125	1.6	656	312	845	356	230	2"	3/4"	150	415	44	115	67
	3.0	656	312	845	356	230	2"	3/4"	150	415	44	134	67
DN150	1.6	706	345	935	406	245	2"	3/4"	150	465	60	154	96
	3.0	706	345	935	406	245	2"	3/4"	150	465	60	172	96
DN200	0.6	850	465	1200	500	375	2"	2"	175	560	60	275	185
	1.6	850	465	1200	500	375	2"	2"	175	560	60	280	185
	3.0	858	460	1200	508	375	2"	2"	175	565	60	280	230
DN250	0.6	950	615	1580	600	532	2"	2"	175	685	72	475	335
	1.6	950	615	1580	600	532	2"	2"	175	685	72	475	335
	3.0	960	615	1580	610	532	2"	2"	175	695	72	475	333
DN300	0.6	1000	740	1700	600	542	2"	2"	200	685	72	500	330
	1.6	1000	740	1700	600	542	2"	2"	200	685	72	500	330
	3.0	1010	740	1700	610	542	2"	2"	200	695	72	500	330
DN350	0.6/1.6/3.0	1100	755	1800	700	526	2"	2"	200	815	108	550	535

FT 13

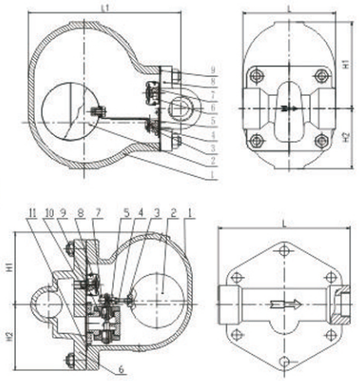

FT 14

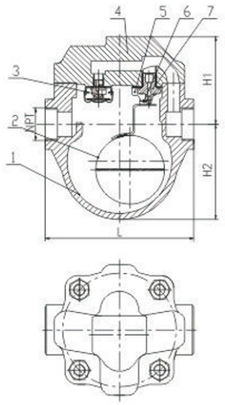

STRUCTURE CHARACTERISTICS

1、This type of steam trap is applied to balanced double seat or single seat with reliable closedown and long life circle.
2、There has always been high temperature condensation water upstream, which will form reliable water seal without any leakage of steam
3、Its operation will not cause any noise. Thus, it is preferable to the environment.
4、The valve is completely open when the steam firstly comes. The low temperature condensation water and air can be discharged rapidly, which largely shortens the start time of equipment.
5、All the internal parts are made of stainless steel, which is resistant to corrosion and cavitation erosion.

STANDARD

1、Basic Design: GB/T22654-2008
2、Face to face dimensions: GB/T 12250-2005
3、Test and inspection: GB/T 12251-2005
4、Flange Size according to: Asme B16.5

MAIN PARTS MATERIALS

NO.	Part name	Material
1	Body	WCB
2	Float Ball	304
3	Seat	2Cr13
4	Disc	2Cr13
5	Yoke	304
6	Seat	2Cr13
7	Bonnet	WCB
8	Gastket	304+Graphite
9	Venting Groupware	304

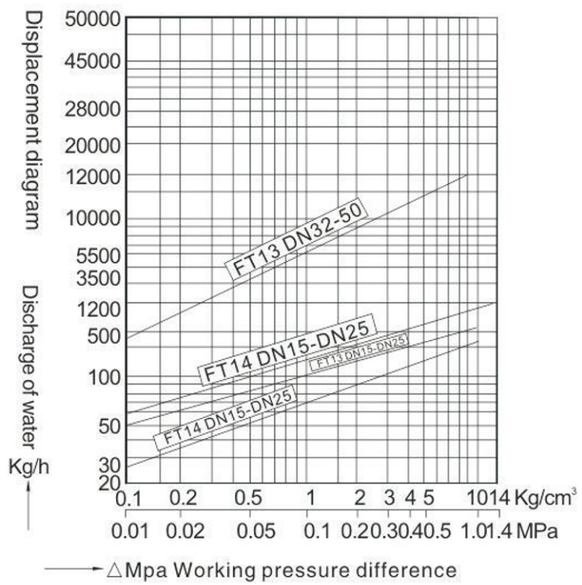

SPECIFICATION

MODEL	PRESSURE	TEMP.	Body Material	Connection	Main dimensions				
					SIZE	L	L1	H1	H2
FT14	PN16 PN25 PN40 150LB 300LB	Max. 350℃	WCB	Thread	DN15 (½")	125	150	85	65
FT14			WCB	Thread	DN20 (3/4")	125	150	85	65
FT14			WCB	Thread	DN25 (1")	145	157	95	70
FT13			WCB	Thread	DN15 (1/2")	120	205	115	80
FT13			WCB	Thread	DN20 (3/4")	120	205	115	80
FT13			WCB	Thread	DN25 (1")	120	205	115	80
FT13			WCB	Thread	DN32 (1-1/4")	250	355	150	100
FT13			WCB	Thread	DN40 (1-1/2")	250	355	150	100
FT13			WCB	Thread	DN50 (2")	250	355	150	100

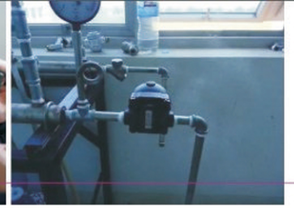

FT43

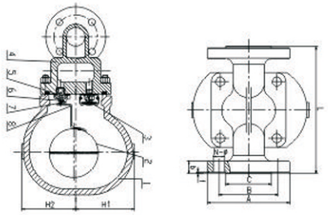

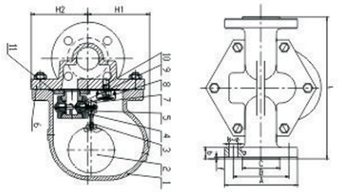

FT44

STRUCTURE CHARACTERISTICS

1、This type of steam trap is applied to balanced double seat or single seat with reliable closedown and long life circle.
2、There has always been high temperature condensation water upstream, which will form reliable water seal without any leakage of steam
3、Its operation will not cause any noise. Thus, it is preferable to the environment.
4、The valve is completely open when the steam firstly comes. The low temperature condensation water and air can be discharged rapidly, which largely shortens the start time of equipment.
5、All the internal parts are made of stainless steel, which is resistant to corrosion and cavitation erosion.

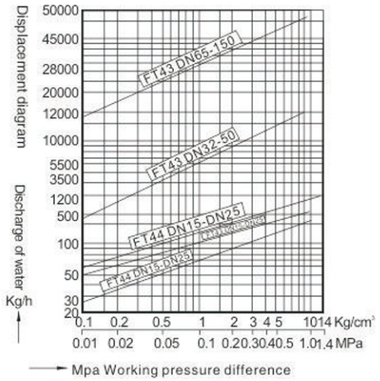

STANDARD

1、Basic Design: GB/T22654-2008
2、Face to face dimensions: GB/T 12250-2005
3、Test and inspection: GB/T 12251-2005
4、Flange Size according to: Asme B16.5

MAIN PARTS MATERIALS

NO.	Part name	Material
1	Body	WCB
2	Float Ball	304
3	Seat	2Cr13
4	Disc	2Cr13
5	Yoke	304
6	Seat	2Cr13
7	Bonnet	WCB
8	Gastket	304+Graphite
9	Venting Groupware	304

SPECIFICATION

MODEL	PRESSURE	TEMP.	Body Material	Connection	Main dimensions			
					SIZE	L	H1	H2
FT43	PN16-PN40 150LB-300LB DIN AND ANSI STANDARD	Max. 350℃	WCB	Flange	DN15 (1/2")	150	115	80
FT43			WCB	Flange	DN20 (3/4")	150	115	80
FT43			WCB	Flange	DN25 (1")	160	115	80
FT43			WCB	Flange	DN32 (1-1/4")	230	150	100
FT43			WCB	Flange	DN40 (1-1/2")	230	150	100
FT43			WCB	Flange	DN50 (2")	230	150	100
FT43	PN16-PN40		WCB	Flange	DN65	450	240	175
FT43			WCB	Flange	DN80	450	240	175
FT43			WCB	Flange	DN100	450	240	175
FT43	PN64 DIN STANDARD		WCB	Flange	DN65	400	240	175
FT43			WCB	Flange	DN80	400	240	175
FT43			WCB	Flange	DN100	400	240	175
FT43	150LB ANSI STANDARD		WCB	Flange	2-1/2"	450	240	175
FT43			WCB	Flange	3"	450	240	175
FT43			WCB	Flange	4"	450	240	175
FT43	300LB ANSI STANDARD		WCB	Flange	2-1/2"	480	240	175
FT43			WCB	Flange	3"	480	240	175
FT43			WCB	Flange	4"	480	240	175

THERMODYNAMIC DISC STEAM TRAP

TD42

TD42F

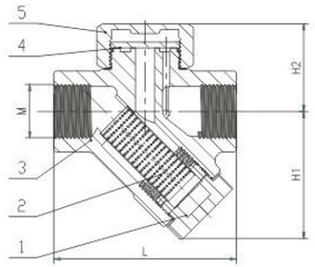

STRUCTURE CHARACTERISTICS

1、It has the steam or air thermal insulation device, which will not be affected by the environmental humidity. It reduces the frequency of motion and lengthens the lifetime.
2、It is equipped with filter and drain valve.
3、It is sensitive and reliable in operation with large capacity.

MAIN PARTS MATERIALS

No.	Part name	Material
1	Plug screw	45#
2	Screen	304
3	Body	WCB
4	Valve plate	Q 235
5	Bonnet	WCB

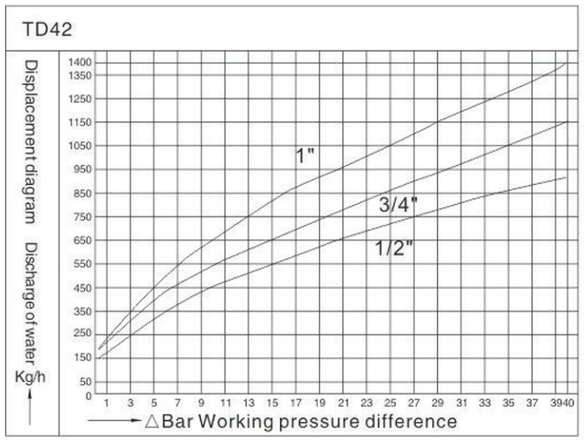

TECHNICAL REQUESTS

1.Design & manufacture: ASTM F 1139-1988
2.Face to face dimesion: ASME B 16.10-1992
3.Test & inspection: API 598
4.Thread standard: NPT or BSP
5. Flange ends: ASME/DIN/JIS

MAIN APPLICATION

This type of steam trap is suitable for steam piping and steam equipment. It can prevent the lekage of steam and drain condensation water, which thus can save energy and prevent water hammer situation and the trouble caused by it.

SPECIFICATION

Product model	Side (DN)	Connection Type	Max. allowable temp.℃	Meterial of valve body	dimension			
					L	H1	H2	W
TD42F	15	Flange	350	WCB	150	47	54	61
	20	Flange	350	WCB	150	52	59	61
	25	Flange	350	WCB	150	59	62	61

Product model	Side (DN)	Connection Type	Max. allowable temp.℃	Meterial of valve body	dimension			
					L	H1	H2	W
TD42	Internal Thread 1/2"	15	350	WCB	75	47	54	47
	Internal Thread 3/4"	20	350	WCB	80	52	59	57
	Internal Thread 1"	25	350	WCB	90	70. 5	89. 5	57

SYPLPHON TYPE STEAM TRAP

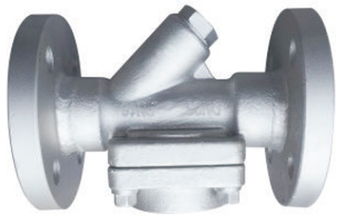

CS16H

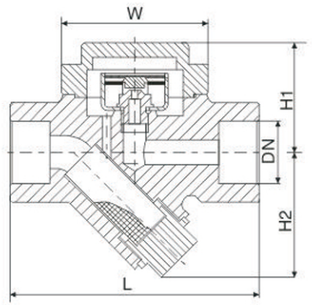

STRUCTURE CHARACTERISTICS

1、It is excellent in air discharge capacity, and is resistant to overheating steam and water hammer.
2、It has a certain circled operation when the temperature is too low during a certain scale of pressure.
3、The valve body is loaded with sylphon, which can be one single unit, or double units, or even multiunits. It can also be applied into the occasions which requires for large discharge capacity.
4、It is equipped with temperature-sensing element and is strong in corrosion resistance, which makes the valves much durable in service.
5、The valve body can be WCB or stainless steel with small size and light weight. Vertical installation will show the best performance of valves, while they can also be installed in any angle.

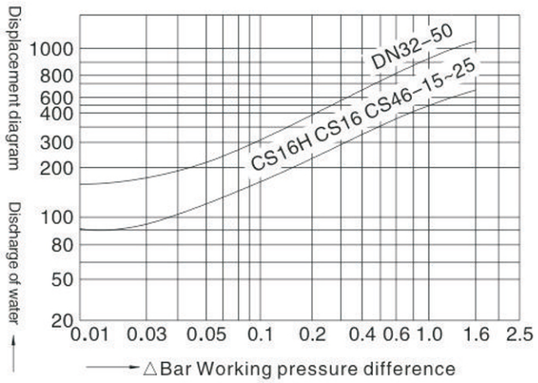

WORKING PRINCIPLE

This type of thermostatic steam traps works by the welded stainless steel thermostatic element expanding with heat and contracting with cold. When the air and condensation water is getting into the valve body, the valve is in the "open" status. And after they have gotten into it, the thermostatic element will expand and close the steam trap tightly.

MAIN APPLICATION

Sylphon type steam trap is widely applied in hot steam main line, steam-traced pipe, dryer and industrial heating steam equipment system and so on.

SPECIFICATION

Product model	Caliber(DN)	Connection Type	Applicable pressure (MPa)	Max. allowable temp.℃	Meterial of valve body	dimension			
						L	H1	H2	W
CS16HF-16C	15~20	Internal Thread	0.01~1.6	250	WCB	100	58	55	70
	25	Internal Thread	0.01~1.6	250	WCB	120	58	55	70
	32~40	Internal Thread	0.01~1.6	250	WCB	150	68	68	90
	50	Internal Thread	0.01~1.6	250	WCB	160	68	68	90
CS46H-16C	15~20	Flange	0.01~1.6	250	WCB	150	58	55	70
	25	Flange	0.01~1.6	250	WCB	160	58	55	70
CS46H-16C	32~50	Flange	0.01~1.6	250	WCB	230	85	60	120

L880 L883
L881 L884
L882 L885

L880F L883F
L881F L884F
L882F L885F

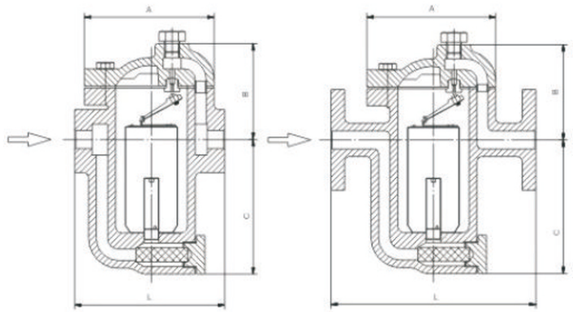

SIDE ACCESS, WITH FILTERS, EXTERNAL DIMENSIONS(MM)

Type	Size	A	B	C	L	Maximum pressure kg/cm²
L880	1/2" 3/4"	96	76	70	128	17
L881	1/2" 3/4" 1"	96	76	100	128	28
L882	3/4" 1" 1 1/4"	145	94	137	170	27
L883	1" 1 1/4" 1 1/2"	180	120	193	202	31
L884	1 1/4" 1 1/2" 1"	203	150	212	232	37
L885	1 1/2" 2"	220	148	248	250	25

Type	Size	A	B	C	L	Maximum pressure kg/cm²
L881F	15.20.25	96	76	100	170	28
L882F	20.25.32	145	94	137	210	27
L883F	25.32.40	180	120	193	270	31
L884F	32.40.50	203	170	212	320	37
L885F	40.50	220	148	248	350	25
L886F	65.80	265	220	310	400	35

Model	Diameter	A	B	C	L	Maximun pressure (kg/cm²)
L883	1/2"–1"	180	147	195	240	55
L883F	15–25	180	147	195	300	55
L885	1 1/4"–2"	220	165	225	280	48
L885F	32–50	220	165	225	350	48

THE TABLE SHOWS THE WATER DISCHARGE CAPACITY OF THE INVERTED BUCKET TYPE STEAM TRAP. (KG/HR)
WHEN WHEN YOU SELECT THE MODEL, PLEASE TAKE 2–3 TIMES OF SAFELY FACTOR INTO CONSIDERATION.

TRAP MODEL		L880	881 L881F 81	882 L882F 82	883 L883F 83	884 L884F 84	885 L885F 85	L886F 86
△P kg/cm²	0.5	240	420	800	1520	2500	3960	7190
	1	280	470	930	1750	2950	4500	8600
	2	230	460	930	1800	3020	4500	8150
	4	260	410	920	2000	3050	4400	8800
	8	280	380	800	1560	2600	4600	8000
	9	310	420	900	1750	2950	4900	8850
	10	260	365	660	1550	2550	4500	8450
	12	200	380	720	1730	2880	4850	9000
	15	230	335	560	1500	2500	3000	8400
	17	250	350	600	1550	2600	3200	8650
	21		240	864	1200	2200	3400	7200
	25		250	900	1300	2400	2900	7800

Trap number	△P kg/cm²											
	0.5	1	2	4	9	8	10	12	15	17	21	25
L883 L883F							1240	1384	1200	1240	960	1040
L885 L885F							3600	3880	2400	2560	2720	2330

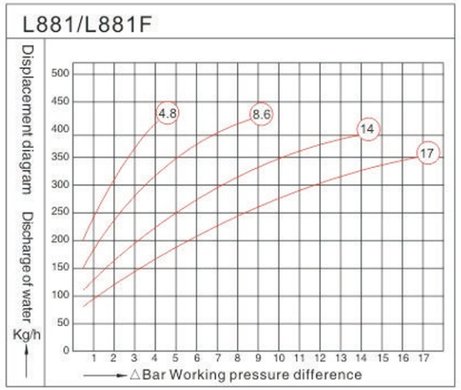

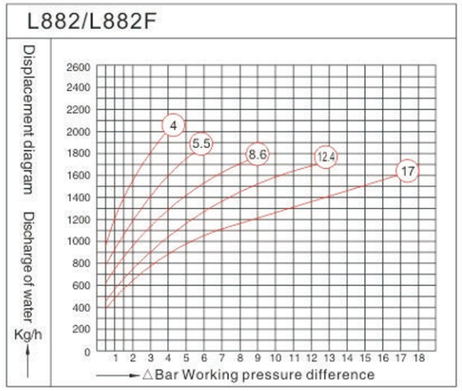

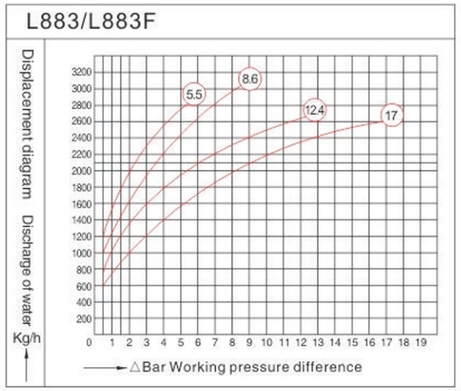

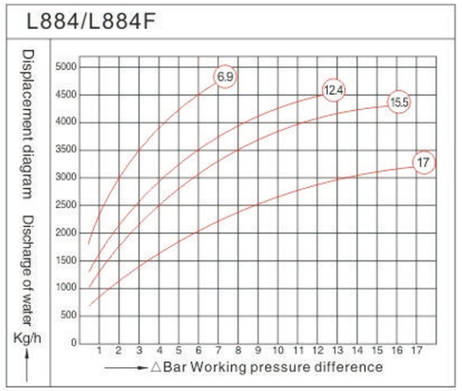

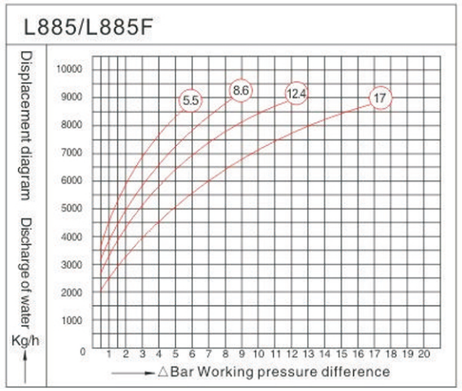

SELECTION OF CONDITIONS FOR ORDERING THE CORRECT

The users may choose the discharge capacity of steam trap as per Max. condensation water which is equal to Max. steam consumption of the machine by multiplying factor(2–3 times), Max operating differential pressure of steam trap,(namely, working pressure before the valve minus the back pressure behind the valve), shall be specified if there is any back pressure. Maximum working temperature of the steam trap, drainage operating mode, connecting type and body material.

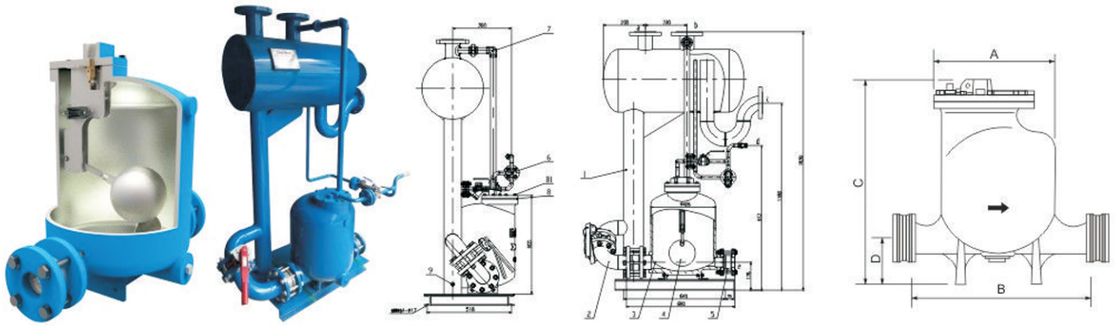

PRODUCT DETAILS

Condensate Recovery System With Four–pumps in Parallel
Model: HPT10, HP10, HPT30, Hp30
Automatic Steam (or gas) powered Condensate Pumps
This range of self–contained pumps uses steam or other pressurised gas as motive power and is designed to remove and recover condensate (or other fl uids) under all operating conditions. They are ideal for use in hazardous areas where electrical pumps would not be suitable, and for the efficient drainage of heat exchangers.
Features:
1、Discharging and recovering condensate can improve production efficiency , save energy, reduce water treatment cost, and fully utilize steam.
2、Eliminates water hammer, avoids equipment damage, and improves the reliability and safely.
3、Effectively recovers condensate , reduce the cost of boiler fuel and water treatment for reuse , and that of down steam water treatment and drainage.
4、Recovers condensate with temperature of up to 185℃ with out evaporation.
When Selecting a suitable model:
1、Make sure of the max. Flow rate of the pump medium.
2、Make sure of the characteriatic , pressure and temperature of the motive medium.
3、Make sure of the total back pressure of the pump.
(1) Vertical lifting height.
(2) Pressure of condensate recovery line(MPa)
(3) resistance loss of pipelines, valves and fittings.
4、Motive medium pressure provided by customer must be 0.1–0.15 MPa higher than the total back pressure.

MAIN PARTS MATERIALS

No.	Name	Qty.	Material	Rmarks
1	Set water tank	1		assemble
2	Inlet assemble	1		assemble
3	Pump Body	1	WCB	
4	Trim	1	SS	
5	Outlet assemble	1		assemble
6	Driving air pipe	1		assemble
7	Air vent pipe	1		assemble
8	Gasket	1	graphite+SS	
9	Drain plug	1	45#	
10	Studs	1	8.8	

MAIN DIMENSION (mm)

Type	L	W	H
Single Pump System Assemble	1150	750	1670
Double Pump System Assemble	1170	1150	1760

Size	A	B	C	D
Pump Body	340	540	540	130

STANDARD

1.Design & Manufacture:JB/T11170–2011
2.Discharge 25kg condensate at each working time.
3.The thickness of the weld seam more than 6 mm for Each welding position

MAIN PERFORMANCE SPECIFICATION

Pressure		13.8MPa	
Test	Shell	4.0MPa	10min
	Seal	0.6MPa	5min
Working test		More than 200 times	
Suitable TEMP.		≤185℃	
Unit body seal		0.6MPa	5min
Tank test(Closed system)		2.5MPa	10min

Code	Name	Size	Connection
a	Inlet	DN80	RF DIN PN16
b	Air vent	DN80	RF DIN PN16
c	Overflow	DN80	RF DIN PN16
d	Driving air	DN15	Sc 1/2"
e	Drain	DN15	Sc 1/2"

SELECT DATASHEET

Pump Inlet size	Back pressure/ Driving pressure %								
	10%	20%	30%	40%	50%	60%	70%	80%	90%
DN80	1.04	1.06	1.08	1.10	1.12	1.15	1.18	1.23	1.28

Driving		2	4			5				7				9.5					12					13.8				
Back Pressure		1.0	1.0	2.0	3.0	1.0	2.0	3.0	4.0	2.0	3.0	4.0	5.0	3.0	4.0	5.0	6.0	7.0	4.0	5.0	6.0	7.0	8.0	5.0	6.0	7.0	8.0	9.0
DN80X50	Single Pump	4050	6020	4100	2160	6730	4770	3330	1900	5580	4410	3780	3150	6480	5670	4680	3690	3060	6390	5580	4410	3760	3150	6120	4950	4230	3690	3420
	Double Pump	8100	12040	8200	4320	13460	9540	6660	3800	11160	6620	7560	6300	12960	11340	9360	7380	6120	12780	11160	8820	7560	6300	12240	9900	5460	7360	6640

Order requirement

1、Driving Medium：☐compressed air ☐Saturated steam
2、Driving Pressure:_____bar
3、Back Pressure:_____bar
4、Condensate：_____kg/h